KAPLAN TARPS

CONSTRUCTION & LANDSCAPE

AGRICULTURE & SPECIALTY

RECYCLING & REFUSE

PARTS CATALOG

860-643-1384 | KaplanTarps.com

TABLE OF CONTENTS

TARP MOTORS 4
ELECTRICAL 5
AXLE AND HOUSING KITS & MISCELLANEOUS 6
ARM KITS 7
ELBOW KITS & CENTERING FLANGES 8
SPRING KITS 9
FRONT-TO-BACK SYSTEMS
- US Tarp Aluminum 10
- Galvanized Steel 14
- Bulletproof Aluminum 18
- Aluminum Tarp Spool 22

REPLACEMENT PARTS
- Aero® 24
- Donovan® 26
- Mountain Tarp™ 28
- Roll Rite® 30

CONSTRUCTION & LANDSCAPE
- Cab Level Wind Tarp System 32
- Pull Style Spring Return Tarp System 34
- Safe-T-Lift™ System 36

RECYCLING & REFUSE
- Gantry Tarp System 38
- Rack & Pinion System 44

AGRICULTURAL & SPECIALTY
- Cable Tarp System 46
- Side Roll Tarp System 49
- Belt & Ratchet Tarp System 52
- Side Dump Tarp System 54

TARPS
- Traditional Heavy Duty Tarps 56
- Welded Tarps 57

MASTER CROSS REFERENCE 58

All rights are reserved. No part of this publication may be reproduced without prior permission. Aero®, Donovan®, and Roll Rite® are registered trademarks of Aero, Donovan, and Roll Rite, respectively. Mountain Tarp™ is a trademark of Mountain Tarp.

TARP MOTORS

KAPLAN TARPS

- Universal 5-bolt hole mounting pattern.
- Replaces most competitor tarp motors on front to back systems.
- Chrome cover, mounting plate, electrical connection, and all mounting hardware Included.
- Manufacturer's 40-month warranty based on the date of manufacture.

Bulletproof Slim Motor (50:1)
Rated for 8' - 26'

Part #13655

Bulletproof Slim Motor (90:1)
Rated for 26' - 38'

Part #15364

Bulletproof Slim Chrome Cover

Part #15859

BP Long Shaft/HD
Chrome Cover

Part #15745

Bulletproof Tarp Motor (60:1)
Rated for 15' - 34'

Part #13732

Bulletproof Tarp Motor (90:1)
Rated for 28' - 38'

Part #13957

24v Bulletproof Tarp Motor (90:1)
Rated for 12' - 38'

Part #15275

HD Bulletproof Tarp Motor (90:1)
Rated for 28' - 45'

Part #15938

Powerhouse Heavy Duty
Tarp Motor

Part #11248

Bulletproof Motor w/ Keyway in Shaft (90:1)
Rated for 12' - 38'

Part #13957-KEYWAY

Bulletproof Dual Shaft Tarp Motor (90:1)
Rated for 28' – 38'

Part #13957-Dual

BP Hydraulic Tarp Motor (60:1)

Part #14370

Wireless Remote Kit

Part #15416

EZ Switch Relay

Part #13994

EZ Switch Kit

Part #12250-Rocker

Waterproof EZ Switch Kit

Part #12250-Waterproof

Rocker Switch

Part #13979

Rotary Switch

Part #11129

Rotary Switch Kit

Part #11479

Waterproof Rotary Switch Kit

Part #15370

40 AMP Manual Reset & 50 AMP Auto Reset

40 AMP Part #11156
50 AMP Part #13720

Waterproof Auto Reset Breaker w/Mounting Tabs

40 AMP Part #16009
50 AMP Part #16015

Trombetta Direct Replacement Relay

Part #12244

EZ Relay Integrated Cover

Part #10698-C

Poly Rocker Switch Bracket

Part #10390

Electric Conversion Kit

Part #12224
Part #12224-BP

Dual Conductor Wire

4GA. Part #14885
6GA. Part #11147
8GA. Part #11279

5-Button Remote Assembly

Part #15563

EZ Switch Plastic Cover

Part #14256

Complete Coiled Wiring Kit

Part #14993-VKIT
Part #14993-HKIT

Vertical or Horizontal Plug Kit

Part #11264
Part #14566

Trailer Contact Plate

Part #14995

Control Box for Gantry
Wireless Standard Control Box

No Remote – Part #16302
Wireless – Part #16109

Electric Motor Conversion w/Easy Switch Kit

Part #12224EZ-KIT

Quick Connect

Part #14316

AXLE AND HOUSING KITS & MISCELLANEOUS

PART #	DESCRIPTION
BEARINGS - US TARP	
11139	3/4" Stamped Steel Flange Bearing C.D.
14533	1" Cast Iron Pillow Block Bearing
15629	1" Narrow Cast Iron Flange Bearing, 3" C.D.
14130	1" Stamped Steel Pillow Block Bearing, 3-25/64" C.D.
15630	3/4" Narrow Cast Iron Flange Bearing
14906	1-1/4" Square Mount Flange Mount Bearing
14859	1" Stamped Steel Flange Bearing
14133	1" Cast Iron Flange Mount Bearing
14150	3/4" Diameter Chevron Bearing
AERO®	
0710-602155	AE 1" Stamped Steel Flange Bearing, 3-1/4"
DONOVAN®	
145	3/4" Stamped Steel Flange Bearing, 3-1/4" C.D.
3346	1" Stamped Steel Flange Bearing 3-1/4" C.D.
MOUNTAIN TARP™	
K0520	Pillow Block Bearing-1"
K0515H	MT 7/8" Hex Cast Iron Flange Bearing, 3-57/64" C.D.
K0520H	7/8" Hex Cast Iron Pillow Block Bearing, 4-1/8" C.D.
K0515	MT Cast Iron Flange Mount Bearing 1"
ROLL RITE®	
31050	RR 3/4" Cast Steel Flange Bearing
47800	1-1/4" Carrier Bearing
ADDITIONAL PARTS	
11201	5" Spool Shaft
13943	1-1/2" Tarp Axle Cap
16091	Tarp Hardware Kit for HD Axle
16092	Tarp Hardware Kit for STD Axle
12550	Ground Level Crank Box Kit w/12' chain & top sprocket shaft
11668	Ground Level Crankbox
11285	#40 Chain with Master Link, 12 ft.
12230	Steel Chain Guard
11303	Aluminum Stop Bracket Kit
14730	4" Rear Cable Pulley
15523	Shephard Hook Assembly
0311-962085	Plastic Insert A-Black and B-White
AXLE KITS	
11200-KIT	HD Tarp Axle, 101-5/8" Kit includes: Spool Shaft, Bearing & Plates
13967-KIT	Tarp Axle, Hollow 103" 1-1/2" Diameter Kit Includes: Spool Shaft, End Caps, Bearing & Plates
14939	91" Pre-Threaded Tarp Axle with Stub Shaft
14940	97" Pre-Threaded Tarp Axle w/ Stub Shaft
14941	101-5/8" Pre threaded tarp axle with stub shaft
WIND DEFLECTOR KITS	
11380-ADD	Aluminum Wind Deflector 97" & Mounting Bracket kit
11208-ADD	Aluminum Wind Deflector 103" & Mounting Bracket kit
14870-ASM	HD Smooth Wind Deflector Assembly; up to 102"
HOUSING KITS	
16116	96" wide fully ass'y open top housing with 90:1 motor
16117	102" wide fully ass'y open top housing with 90:1 motor
GANTRY HOUSINGS	
16262	Aluminum Gantry Housing 98" Wide
16262-XL	XL Aluminum Gantry Housing 98" Wide
GANTRY HOUSING KITS	
16262-ELEC	Aluminum Housing 98" Wide, ASSEMBLED with BP 60:1 Motor, Axle, & Spool Shaft
16262-HYD	Aluminum Housing 98" Wide, ASSEMBLED with BP 60:1 Hydraulic Motor, Axle, & Spool Shaft

ARM KITS

PART #	DESCRIPTION	COVER LENGTH
ALUMINUM ARM KITS		
13433	3-Spring External Mount Aluminum Complete Arm Set	12 ft
11564	4-Spring External Mount Aluminum Complete Arm Set	24 ft
12365	5-Spring External Mount Aluminum Complete Arm Set	26 ft
LOWER ARM KITS		
4643	3-Spring External Mount Lower Arm Set	12 ft
4644	4-Spring External Mount Lower Arm Set	24 ft
4645	5-Spring External Mount Aluminum Lower Arm Set	26 ft
UNDERBODY COMPLETE ARM KITS		
13436	84" Underbody Mount Aluminum Complete Arm Set	26 ft
11447	144" Underbody Mount Aluminum Complete Arm Set	38 ft
UPPER BOW SET		
7670	Aluminum Tarp Bow Set	
STEEL ARM KITS		
12223	4-Spring External Mount Steel Complete Arm Set	24 ft
12254	5-Spring External Mount Steel Complete Arm Set	26 ft
**Add -BA for upper bent arms*		
LOWER ARM KITS		
12367	4-Spring External Mount Steel Lower Arm Set - 36" Length	24 ft
13405	5-Spring External Mount Steel Lower Arm Set - 48" Length	26 ft
**Add -BA for upper bent arms*		
UNDERBODY COMPLETE ARM KITS		
12266	Underbody Mount Steel Complete Arm Set w/63" Lower Arms	26 ft
14575	Underbody Mount Steel Complete Arm Set w/84" Lower Arms	28 ft
14576	126" U-B Steel Complete Arm Set	38 ft
14577	144" U-B Steel Complete Arm Set	40 ft
**Add -BA for upper bent arms*		
UPPER BOW SET		
11568	Steel Tarp Bow Set	
**Add -BA for upper bent arms*		
BULLETPROOF ARM KITS		
15324	4-Spring External Mount Bulletproof Arm Set - 144" Side Arms	
14492	4-Spring External Mount Bulletproof Arm Set - 168" Side Arms	
16392	5-Spring External Mount Bulletproof Arm Set - 168" Side Arms	
**Add -BA for upper bent arms*		
UNDERBODY BULLETPROOF COMPLETE ARM KITS		
13778	168" U-B Bulletproof Arm Kit	26 ft
13806	192" U-B Bulletproof Arm Kit	30 ft
14578	240" U-B Bulletproof Arm Kit	38 ft
16331	HD U-B Bulletproof Arm Kit	45 ft
**Add -BA for upper bent arms (-BA not available on HD)*		

ELBOW KITS & CENTERING FLANGES

PART #	DESCRIPTION
ALUMINUM	
11301	30 Deg. Aluminum Elbow Kit
11302	45 Deg. Aluminum Elbow Kit
11231	Plastic Centering Flange, Each
14942	2-1/2" diam. Rubber Tarp Centering Flange, Each
STEEL	
13845	30 Deg. Steel Elbow Kit
13546	45 Deg. Steel Elbow Kit
13941	Rubber Tarp Centering Flange, Each
13913	Tarp Collar Clamp, required with 13941, Each
BULLETPROOF	
15606	30 Deg. Bulletproof Elbow, Each
13632	1.3" I.D., for standard steel cross-tube, each
13632-1.8	1.8" I.D., for aluminum 3-piece cross-tube, each
16373	1.3" Rubber Centering Flange Kit w/Bolts
16374	1.8" I.D. Rubber Centering Flange Kit w/Bolts
AERO®	
0311-862277	Round Rubber Tarp Centering Flange, Each
13913	Tarp Collar Clamp, required with 0311-862273
0311-862272	Teardrop shape Rubber Centering Flange
DONOVAN®	
3771N	Donovan Rubber Centering Flange, Each
MOUNTAIN TARP™	
K0420D	4-1/2" Black Donut for Steel or Aluminum Crossover
ROLL RITE®	
76900	RR 30 Deg. Elbow, Each
76910	RR 45 Deg. Elbow, Each
76915	RR 45 Deg. Extreme Elbow, Each
76810	RR Plastic Center Flange, Pair
15369	RR Rubber Centering Flange, Each

SPRING KITS

PART #	DESCRIPTION
EXTERNAL MOUNTS	
11244-D	3-Spring Lower Aluminum Arm, 31" Long Assembly, Driver Side
11244-P	3-Spring Lower Aluminum Arm, 31" Long Assembly, Passenger Side
14084-D	4-Spring Lower Aluminum Arm, 48" Long Assembly, Driver Side
14084-P	4-Spring Lower Aluminum Arm, 48" Long Assembly, Passenger Side
11243-D	4-Spring Lower Aluminum Arm, 60" Long Assembly, Driver Side
11243-P	4-Spring Lower Aluminum Arm, 60" Long Assembly, Passenger Side
11242-D	5-Spring Lower Aluminum Arm, 84" Long Assembly, Driver Side
11242-P	5-Spring Lower Aluminum Arm, 84" Long Assembly, Passenger Side
15400-DRIVER	4-Spring Casting Assembly Driver
15399-PASS	4-Spring Casting Assembly Passenger
14191-FENDER	7-Spring Fender Mount Assembly-Driver's Side, 7-Spring
14192-FENDER	7-Spring Fender Mount Assembly - Passenger's Side, 7-Spring
14362	7-Spring Underbody Assembly w/o Mounting Plate- Driver's Side
14363	7-Spring Underbody Assembly w/o Mounting Plate- Passenger's Side
16265-DRIVER	5-Spring bullet proof lower casting assembly
16265-PASS	5-Spring bullet proof lower casting assembly
16255	BP 5-Spring Lower Arm Assembly-LH
16256	BP 5-Spring Lower Arm Assembly-RH
UNDERBODY MOUNTS	
13954-FENDER	10-Spring Underbody Assembly - Driver's Side, Fender
13955-FENDER	10-Spring Underbody Assembly - Passenger's Side, Fender
13954	10-Spring Underbody Assembly - Driver's Side
13955	10-Spring Underbody Assembly - Passenger's Side
14403	10-Spring Underbody Assembly w/o Mounting Plate - Driver's Side
14404	10-Spring Underbody Assembly w/o Mounting Plate - Passenger's Side
14966	HD 13 Coil UB Spr - Driver Side
14967	HD 13 Coil UB Spr - Passenger's Side
11224-C	15 Coil - Underbody Spring Assembly, Passenger Side Custom
11225-C	15 Coil - Underbody Spring Assembly, Drivers Side Custom
16096L	Driver Side HD UB 2-15 Coil Spring Box
16096R	Passenger Side HD UB 2-15 Coil Spring Box
AERO®	
0311-960346	AE Undermount Spring Assembly 5/8" D.S.
0311-960347	AE Undermount Spring Assembly 5/8" P.S.
0311-960389	AE PowerPack 3 Spring Assembly, One Side Only
DONOVAN®	
8001	Pivot Arm Lh Lower Assembly
8002	Pivot Arm Rh Lower Assembly
3072	DV 21-Spring UB Spring Assembly (RH-DRIVER)
3073	DV 21-Spring UB Spring Assembly (LH-PASS)
4227	DV UB Spring Assembly (RH-PASS)
4230	DV UB Spring Assembly (LH-DRIVER)
MOUNTAIN TARP™	
K0260C	MT 4-Spring Casting Assembly Driver
K0261C	MT 4-Spring Casting Assembly Passenger
K0260A	4-Spring Clock Spring Assembly - Driver's Side
K0261A	4-Spring Clock Spring Assembly - Passenger's Side
K0260	MT 5-Spring Clock Spring Assembly-Driver Side
K0261	MT 5-Spring Clock Spring Assembly-Passenger Side
K0207	MT UB Spring Assembly with Hex Shaft - Passenger's Side
K0208	MT UB Spring Assembly w/Hex - Driver's Side
K0209	MT UB Spring Assembly with Hex Shaft and connector, does not included channel Passenger Side
K0214	MT UB Spring Assembly w/Hex shaft and connector, does not included channel - Driver's Side
ROLL RITE®	
4645D	RR Pivot Lower Arm Assembly For Driver Side
4645P	RR Pivot Lower Arm Assembly For Passenger Side
46470	6-Spring Assembly/Top Mount, Driver Side
46480	6-Spring Assembly/Top Mount, Passenger Side
47400	Pivot Pin Assembly for 8-Spring UB, Driver Side
47410	Pivot Pin Assembly for 8-Spring UB, Passenger Side
47470	8-Spring Fender/Top Mount Spring Assembly, Driver Side
47480	8-Spring Fender/Top Mount Spring Assembly, Passenger Side
1039157LH	12-Spring Roll Rite Fender Assembly - Driver Side
1039157RH	12-Spring Roll Rite Fender Assembly - Passenger Side
103625LH	16-Spring Roll Rite Fender Assembly - Driver Side
103625RH	16-Spring Roll Rite Fender Assembly - Passenger Side

**Item not shown. *Oversized items, over length shipping rates apply.

ALUMINUM EXTERNAL MOUNT SYSTEMS

PART #	DESCRIPTION
ALUMINUM 3-SPRING EXTERNAL MOUNT SYSTEM STANDARD DUTY KIT	
11417	Base System - No Wind Deflector or Housing
11422	97" Wide Wind Deflector
11423	103" Wide Wind Deflector
14998	102" Wide Smooth Wind Deflector
14999	Open Top Aluminum Housing, Up to 102" Wide
11428	92" Wide Aluminum Housing
11429	98" Wide Aluminum Housing
11430	104" Wide Aluminum Housing
ALUMINUM 4-SPRING EXTERNAL MOUNT SYSTEM STANDARD DUTY KIT	
11529	Base System - No Wind Deflector or Housing
11530	97" Wide Wind Deflector
11531	103" Wide Wind Deflector
15000	102" Wide Smooth Wind Deflector
15001	Open Top Aluminum Housing, Up to 102" Wide
11532	92" Wide Aluminum Housing
11533	98" Wide Aluminum Housing
11534	104" Wide Aluminum Housing
-20	12' – 20' Openings
ALUMINUM 5-SPRING EXTERNAL MOUNT SYSTEM STANDARD DUTY KIT	
11419	Base System - No Wind Deflector or Housing
11426	97" Wide Wind Deflector
11427	103" Wide Wind Deflector
15002	102" Wide Smooth Wind Deflector
15003	Open Top Aluminum Housing, Up to 102" Wide
11434	92" Wide Aluminum Housing
11435	98" Wide Aluminum Housing
11436	104" Wide Aluminum Housing

ALUMINUM UNDERBODY MOUNT SYSTEMS

PART #	DESCRIPTION
84" UNDERBODY MOUNT ALUMINUM SYSTEM STANDARD DUTY KIT	
11535	Base System - No Wind Deflector or Housing
11437	97" Wide Wind Deflector
11438	103" Wide Wind Deflector
15022	102" Wide Smooth Wind Deflector
15023	Open Top Aluminum Housing, Up to 102" Wide
11439	92" Wide Aluminum Housing
11440	98" Wide Aluminum Housing
11441	104" Wide Aluminum Housing
-96	Up to 28' Trailer
144" UNDERBODY MOUNT ALUMINUM SYSTEM STANDARD DUTY KIT	
11421	Base System - No Wind Deflector or Housing
11442	97" Wide Wind Deflector
11443	103" Wide Wind Deflector
15032	102" Wide Smooth Wind Deflector
15033	Open Top Aluminum Housing, Up to 102" Wide
11444	92" Wide Aluminum Housing
11445	98" Wide Aluminum Housing
11446	104" Wide Aluminum Housing
192" UNDERBODY MOUNT ALUMINUM SYSTEM STANDARD DUTY KIT	
15034	Base System - No Wind Deflector or Housing
15035	97" Wide Wind Deflector
15036	103" Wide Wind Deflector
15037	102" Wide Smooth Wind Deflector
15038	Open Top Aluminum Housing, Up to 102" Wide
15039	92" Wide Aluminum Housing
15040	98" Wide Aluminum Housing
15041	104" Wide Aluminum Housing

US TARP ALUMINUM

PART #	DESCRIPTION	COVER LENGTH
ALUMINUM ARM KITS		
13433	3-Spring External Mount Aluminum Complete Arm Set	12 ft
11564	4-Spring External Mount Aluminum Complete Arm Set	24 ft
12365	5-Spring External Mount Aluminum Complete Arm Set	26 ft
LOWER ARM KITS		
4643	3-Spring External Mount Lower Arm Set	12 ft
4644	4-Spring External Mount Lower Arm Set	24 ft
4645	5-Spring External Mount Aluminum Lower Arm Set	26 ft
UNDERBODY COMPLETE ARM KITS		
13436	84" Underbody Mount Aluminum Complete Arm Set	26 ft
11447	144" Underbody Mount Aluminum Complete Arm Set	38 ft
UPPER BOW SET		
7670	Aluminum Tarp Bow Set	
7671	Tension Bow	
12372	Tension Hoop	

4-Spring Aluminum Arm Kit

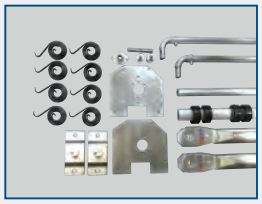

Part #11564

Upper Aluminum Tarp Bow Kit

Part #7670

Tension Bow

Part #7671

Tension Hoop

Part #12372

**Item not shown. *Oversized items, over length shipping rates apply.

US TARP ALUMINUM

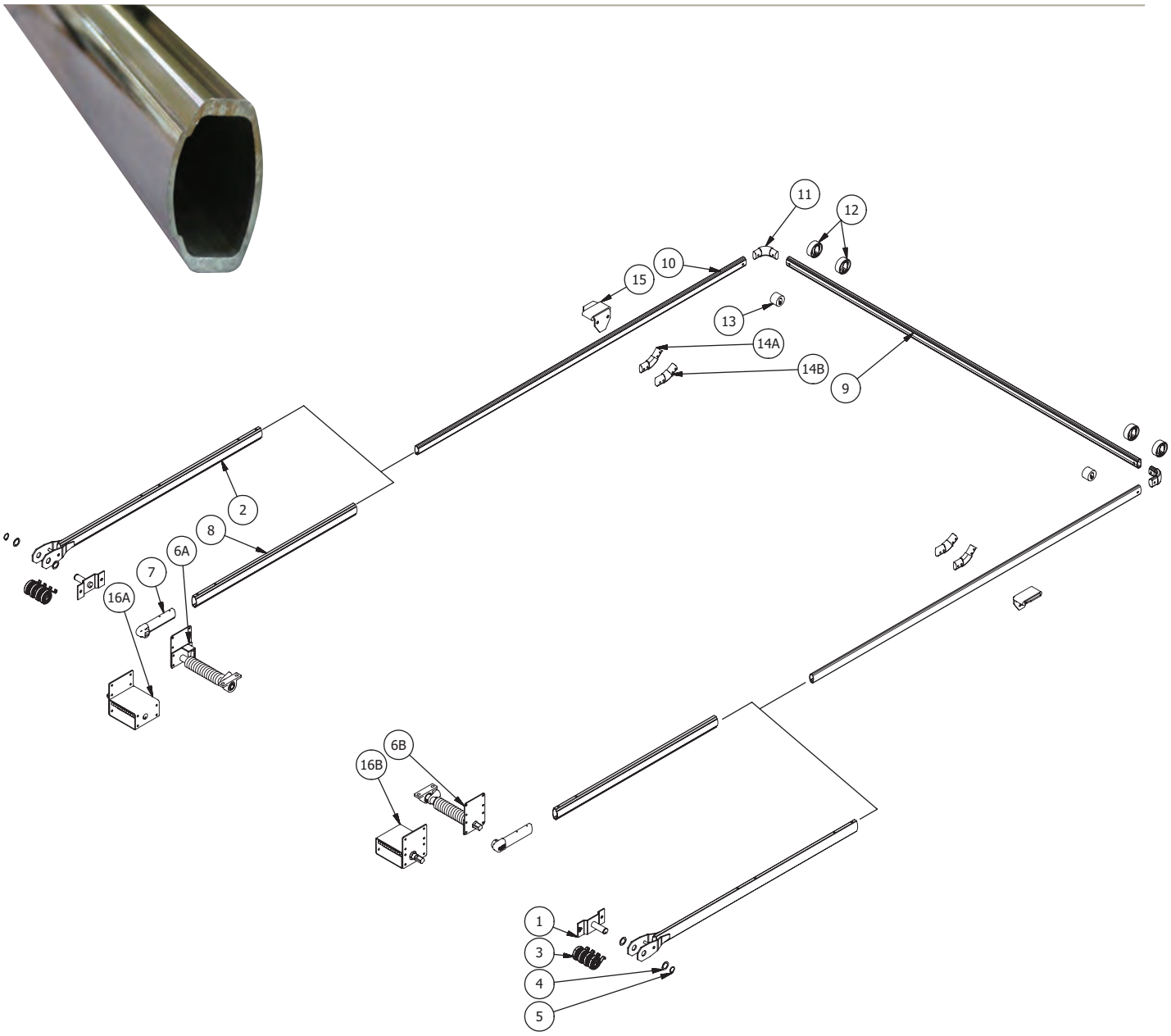

US TARP ALUMINUM

REF.	QTY	PART #	DESCRIPTION
MOUNT ALUMINUM ARMS			
1	2	11183	3-Spring Pivot Pin
1	2	11132	4-Spring Pivot Pin
1	2	11272	5-Spring Pivot Pin
2	2	11244	3-Spring Lower Aluminum Arm, 31" Length
2	2	14084	4-Spring Lower Aluminum Arm, 48" Length
2	2	11243	4-Spring Lower Aluminum Arm, 60" Length
2	2	11242	5-Spring Lower Aluminum Arm, 84" Length
3	8	11121	Spiral Torsion Spring
4	4	11141	Stainless Steel Bushing for Pivot Pin
5	2	11142	External Retaining Ring for Pivot Pin
**	1	13523	Hardware Kit for External Mount Lower Arms
UNDERBODY & SIDE MOUNT ALUMINUM ARMS			
6A	1	11224	Underbody Spring Assembly, Right - Passengers Side
6B	1	11225	Underbody Spring Assembly, Left - Drivers Side
7	2	11226	Underbody Aluminum Arm Casting
8	2	11228	Underbody Aluminum Lower Arm, 84" Length
8	2	14971	Underbody Aluminum Lower Arm, 96" Length
8	2	11227	Underbody Aluminum Lower Arm, 144" Length*
8	2	14972	Underbody Aluminum Lower Arm, 192" Length*
ALUMINUM UPPER ARMS			
9	1	11232	Aluminum Cross Tube, 105-1/2" Long
10	2	11236	Aluminum Upper Side Arm, 98" Long
10	2	14600	Aluminum Upper Side Arm, 122" Long*
11	2	11235	Aluminum 90 Degree Corner
12	4	11231	Plastic Tarp Centering Flange
**	1	14073	Hardware Kit for Aluminum Upper Arms
OPTIONAL ITEMS			
13	2	14942	2-1/2" Rubber Tarp Centering Flange
14A	2	11233	Optional Aluminum 45 Degree Elbow
14B	2	11234	Optional Aluminum 30 Degree Elbow
15	2	11177	Aluminum Stop Bracket w/ Rubber Bumper
16A	1	14191	7-Spring Underbody Assembly - Left - Drivers Side
16B	1	14192	7-Spring Underbody Assembly - Right - Passengers Side
16A	1	13954	10-Spring Underbody Assembly - Left - Drivers Side
16B	1	13955	10-Spring Underbody Assembly - Right - Passengers Side

**Item not shown. *Oversized items, over length shipping rates apply.

GALVANIZED STEEL EXTERNAL MOUNT SYSTEMS

PART #	DESCRIPTION
4-SPRING STANDARD DUTY KIT	
11525	Base System - No Wind Deflector or Housing
11526	97" Wide Wind Deflector
11527	103" Wide Wind Deflector
15004	102" Wide Smooth Wind Deflector
15005	Open Top Aluminum Housing, up to 102" Wide
12323	92" Wide Aluminum Housing
11450	98" Wide Aluminum Housing
11451	104" Wide Aluminum Housing
5-SPRING STANDARD DUTY KIT	
11567	Base System - No Wind Deflector or Housing
12302	97" Wide Wind Deflector
12305	103" Wide Wind Deflector
15006	102" Wide Smooth Wind Deflector
15007	Open Top Aluminum Housing, up to 102" Wide
12336	92" Wide Aluminum Housing
12337	98" Wide Aluminum Housing
12338	104" Wide Aluminum Housing

GALVANIZED STEEL UNDERBODY MOUNT SYSTEM

PART #	DESCRIPTION
63" STANDARD DUTY KIT	
11540	Base System - No Wind Deflector or Housing
11558	97" Wide Wind Deflector
11559	103" Wide Wind Deflector
16529	102" Wide Smooth Wind Deflector
16530	Open Top Aluminum Housing, Up to 102" Wide
12262	92" Wide Aluminum Housing
12263	98" Wide Aluminum Housing
12264	104" Wide Aluminum Housing
84" STANDARD DUTY KIT	
14121	Base System - No Wind Deflector or Housing
15008	97" Wide Wind Deflector
15009	103" Wide Wind Deflector
15010	102" Wide Smooth Wind Deflector
15011	Open Top Aluminum Housing, Up to 102" Wide
15012	92" Wide Aluminum Housing
15013	98" Wide Aluminum Housing
15014	104" Wide Aluminum Housing
126" STANDARD DUTY KIT	
14221	Base System - No Wind Deflector or Housing
15015	97" Wide Wind Deflector
15016	103" Wide Wind Deflector
15017	102" Wide Smooth Wind Deflector
15018	Open Top Aluminum Housing, Up to 102" Wide
15019	92" Wide Aluminum Housing
15020	98" Wide Aluminum Housing
15021	104" Wide Aluminum Housing

GALVANIZED STEEL

PART #	DESCRIPTION	COVER LENGTH
STEEL ARM KITS		
12223	4-Spring External Mount Steel Complete Arm Set	24 ft
12254	5-Spring External Mount Steel Complete Arm Set	26 ft
**Add -BA for upper bent arms*		
LOWER ARM KITS		
12367	4-Spring External Mount Steel Lower Arm Set - 36" Length	24 ft
13405	5-Spring External Mount Steel Lower Arm Set - 48" Length	26 ft
**Add -BA for upper bent arms*		
UNDERBODY COMPLETE ARM KITS		
12266	Underbody Mount Steel Complete Arm Set w/63" Lower Arms	26 ft
14575	Underbody Mount Steel Complete Arm Set w/84" Lower Arms	38 ft
14576	126" U-B Steel Complete Arm Set	
14577	144" U-B Steel Complete Arm Set	
**Add -BA for upper bent arms*		
UPPER BOW SET		
11568	Steel Tarp Bow Set	
7671S	Galvanized Steel Tension Bow	
12372	Tension Hoop	
**Add -BA for upper bent arms*		

4-Spring Steel Arm Kit

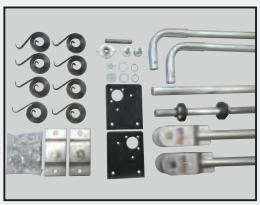

Part #12223

Galvanized Steel Tension Bow

Part #7671S

Tension Hoop

Part #12372

**Item not shown. *Oversized items, over length shipping rates apply.

GALVANIZED STEEL

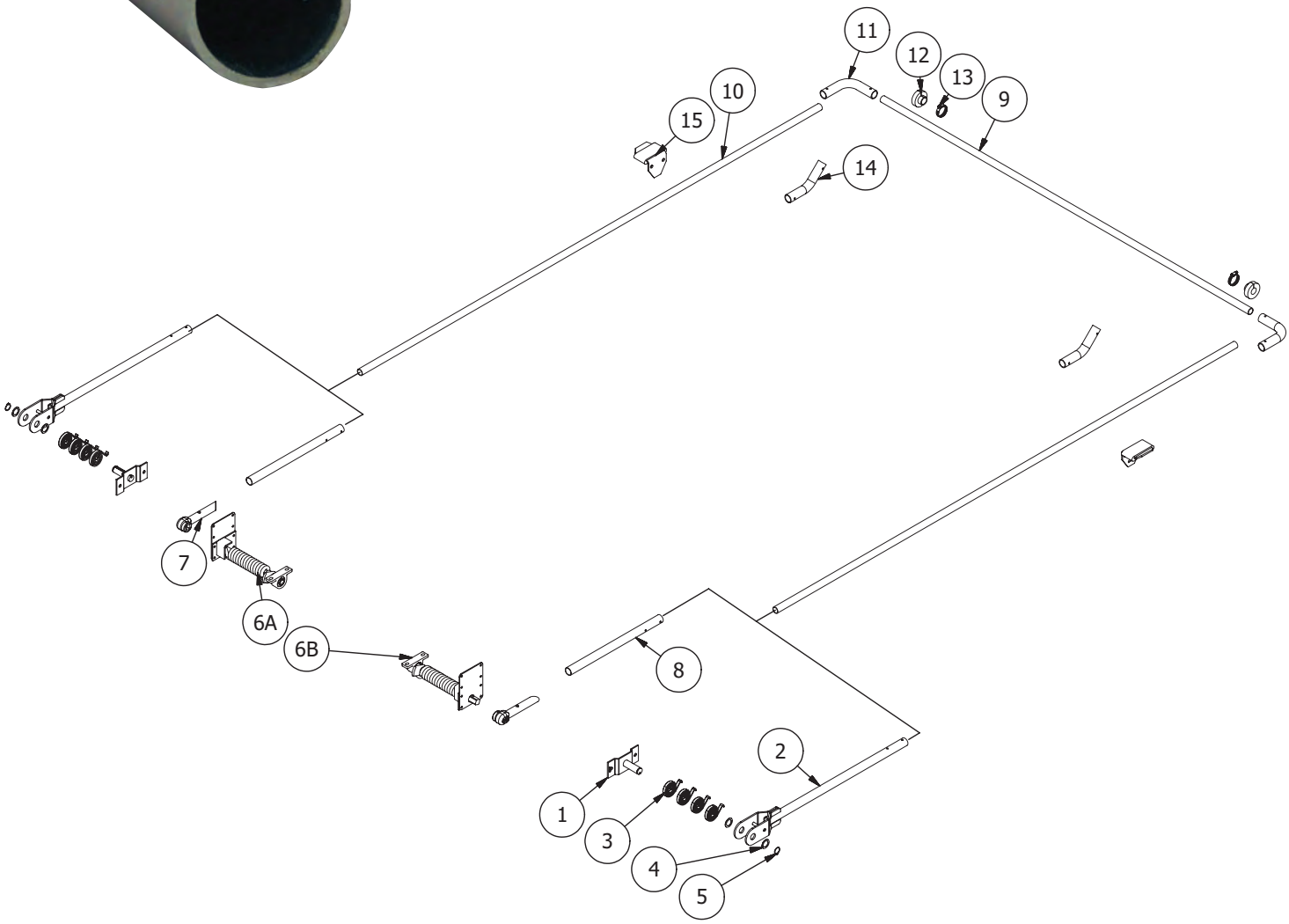

GALVANIZED STEEL

REF.	QTY	PART #	DESCRIPTION
EXTERNAL MOUNT GALVANIZED STEEL ARMS			
1	2	11132	4-Spring Pivot Pin
1	2	11272	5-Spring Pivot Pin
2	2	11266	4-Spring Lower Steel Arm, 36" Length
2	2	11370	5-Spring Lower Steel Arm, 48" Length
3	8	11121	Spiral Torsion Spring
4	4	11141	Stainless Steel Bushing for Pivot Pin
5	2	11142	External Retaining Ring for Pivot Pin
UNDERBODY & SIDE MOUNT GALVANIZED STEEL ARMS			
6A	1	11224	Underbody Spring Assembly, Right - Passengers Side
6B	1	11225	Underbody Spring Assembly, Left - Drivers Side
7	2	11358	Underbody Steel Lower Arm Casting
8	2	13776	Steel Lower Side Arm, 63" Long
8	2	13819	Steel Lower Side Arm, 84" Long
8	2	13854	Steel Lower Side Arm, 126" Long*
GALVANIZED STEEL UPPER ARMS			
9	1	11269	Steel Cross Tube, 96" Long
10	2	11268	Steel Upper Side Arm, 120" Long*
11	2	11267	Steel 90 Degree Corner
12	2	13941	Rubber Tarp Centering Flange
13	2	13913	Hose Clamp
**	1	14074	Hardware Kit for Upper Arms
OPTIONAL ITEMS			
14	2	13468	Optional Steel 45 Degree Elbow
14	2	13700	Optional Steel 30 Degree Elbow

**Item not shown. *Oversized items, over length shipping rates apply.

BULLETPROOF ALUMINUM EXTERNAL MOUNT SYSTEMS

PART #	DESCRIPTION
4-SPRING (144" ARMS) STANDARD DUTY KIT	
15042	Base System - No Wind Deflector or Housing
15043	97" Wide Wind Deflector
15044	103" Wide Wind Deflector
15045	102" Wide Smooth Wind Deflector
15046	Open Top Aluminum Housing, Up to 102" wide
15047	92" Wide Aluminum Housing
15048	98" Wide Aluminum Housing
15049	104" Wide Aluminum Housing
4-SPRING (168" ARMS) STANDARD DUTY KIT	
14076	Base System - No Wind Deflector or Housing
14077	97" Wide Wind Deflector
14078	103" Wide Wind Deflector
15050	102" Wide Smooth Wind Deflector
15051	Open Top Aluminum Housing, Up to 102" Wide
14079	92" Wide Aluminum Housing
14080	98" Wide Aluminum Housing
14081	104" Wide Aluminum Housing
5-SPRING (168" ARMS) STANDARD DUTY KIT	
15466	Base System - No Wind Deflector or Housing
15467	97" Wide Wind Deflector
15468	103" Wide Wind Deflector
15469	102" Wide Smooth Wind Deflector
15470	Open Top Aluminum Housing, Up to 102" Wide
15471	92" Wide Aluminum Housing
15472	98" Wide Aluminum Housing
15473	104" Wide Aluminum Housing

BULLETPROOF ALUMINUM UNDERBODY MOUNT SYSTEMS

PART #	DESCRIPTION
168" STANDARD DUTY KIT WITH MOTOR UPGRADE • HEAVY DUTY KIT**	
13625	Base System - No Wind Deflector or Housing
15052	97" Wide Wind Deflector
15053	103" Wide Wind Deflector
15054	102" Wide Smooth Wind Deflector
15055	Open Top Aluminum Housing, Up to 102" Wide
15056	92" Wide Aluminum Housing
15057	98" Wide Aluminum Housing
15058	104" Wide Aluminum Housing
-144	For Up to 20' Trucks
-192	**For Up to 30' Trailer
-210	**For Up to 32'
240" BULLETPROOF ALUMINUM HEAVY DUTY KIT	
14503	Base System - No Wind Deflector or Housing
15073	97" Wide Wind Deflector
15074	103" Wide Wind Deflector
15075	102" Wide Smooth Wind Deflector
15076	Open Top Aluminum Housing, Up to 102" Wide
15077	92" Wide Aluminum Housing
15078	98" Wide Aluminum Housing
15079	104" Wide Aluminum Housing
HD - EXTREME DUTY KIT	
15087	Base System - No Wind Deflector or Housing
15088	XL Scrap Hauling Housing
-Wire	Trailer Wiring instead of Contact Plate

BULLETPROOF ALUMINUM

PART #	DESCRIPTION	COVER LENGTH
BULLETPROOF ARM KITS		
15324	4-Spring External Mount Bulletproof Arm Set - 144" Side Arms	
14492	4-Spring External Mount Bulletproof Arm Set - 168" Side Arms	
**Add -BA for upper bent arms*		
UNDERBODY BULLETPROOF COMPLETE ARM KITS		
13778	168" U-B Bulletproof Arm Kit	26 ft
13806	192" U-B Bulletproof Arm Kit	30 ft
14578	240" U-B Bulletproof Arm Kit	38 ft
16331	HD U-B Bulletproof Arm Kit	45 ft
7671-BP	Bulletproof Tension Bow	
12372	Tension Hoop	
**Add -BA for upper bent arms (-BA not available on HD)*		

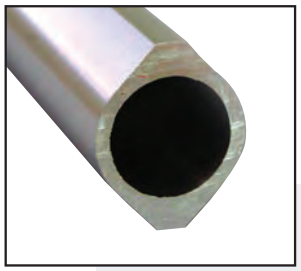

4-Spring External Mount Bulletproof Arm Set 144" Side Arms

Part #15324

Bulletproof Tension Bow

Part #7671-BP

Tension Hoop

Part #12372

**Item not shown. *Oversized items, over length shipping rates apply.

BULLETPROOF ALUMINUM

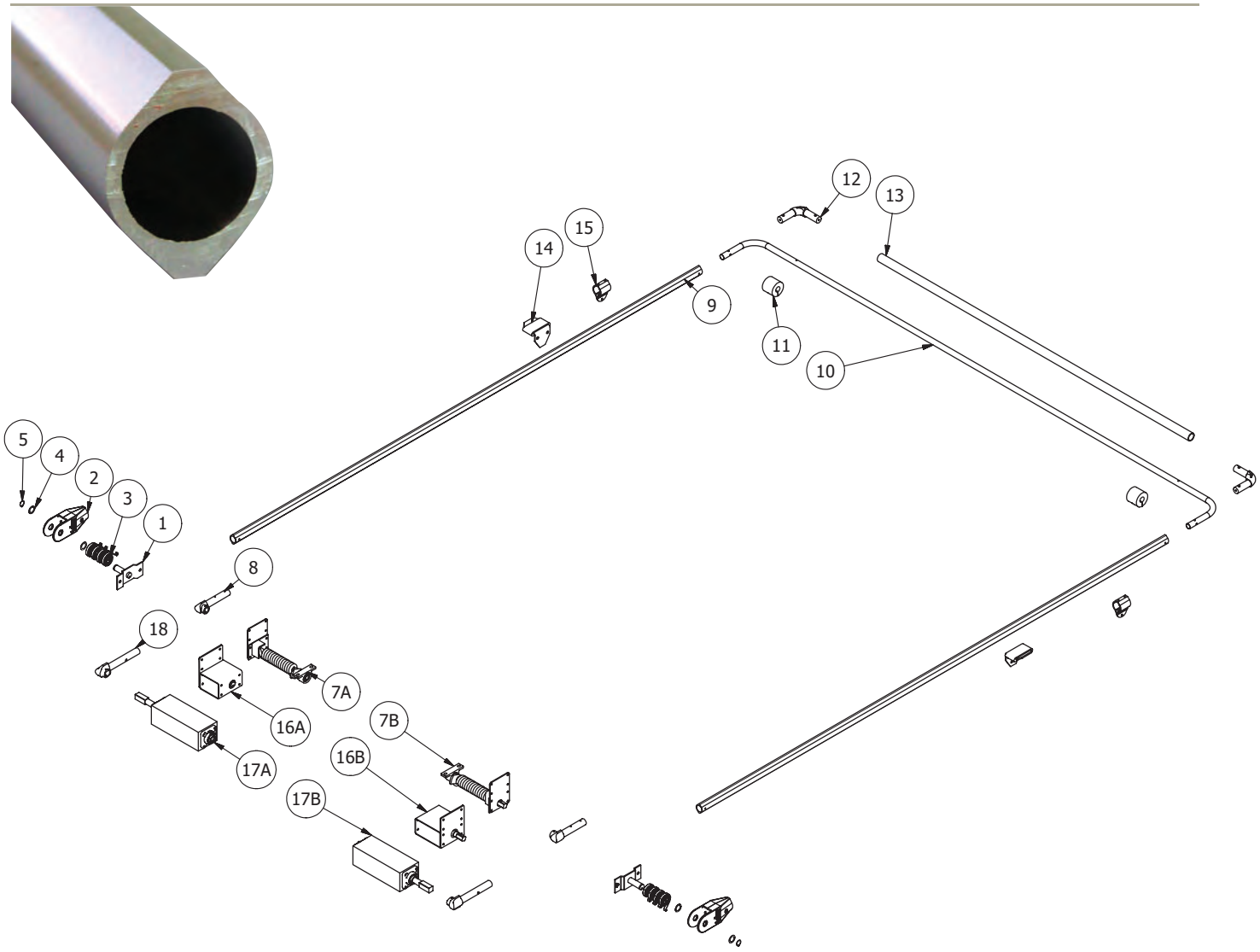

BULLETPROOF ALUMINUM

REF.	QTY	PART #	DESCRIPTION
EXTERNAL MOUNT			
1	2	11132	4-Spring Pivot Pin
2	2	13942	4-Spring External Mount Two-Piece Casting for Bulletproof Arm
3	8	11121	Spiral Torsion Spring
4	4	11141	Stainless Steel Bushing for Pivot Pin
5	2	11142	Retaining Ring for Pivot Pin
6	4	14434	Brass Bushing
**	1	16080	Hardware Kit for External Mount 4-Spring Lower Arms
UNDERBODY MOUNT ITEMS			
7A	1	11224	Underbody Spring Assembly, Right - Passengers Side
7B	1	11225	Underbody Spring Assembly, Left - Drivers Side
8	2	13634	Underbody Bulletproof Arm Casting
17A	1	14967	HD BP Underbody Spring, Right - Passengers Side
17B	1	14966	HD BP Underbody Spring, Left - Drivers Side
18	2	15717	HD Bulletproof Casting
**	1	16082	Hardware Kit for Standard Underbody Mount Lower
**	1	16083	Hardware Kit for Heavy Duty Underbody Mount Lower
BULLETPROOF ALUMINUM ARMS			
9	2	14877	Aluminum Bulletproof Arm, 144" Length*
9	2	13633	Aluminum Bulletproof Arm, 168" Length*
9	2	13722	Aluminum Bulletproof Arm, 192" Length*
9	2	14801	Aluminum Bulletproof Arm, 210" Length*
9	2	13723	Aluminum Bulletproof Arm, 240" Length*
9	2	14748	Heavy Duty Aluminum Bulletproof Arm, 288" Length*
UPPER ARMS ITEMS			
10	1	14521	Steel Cross Tube 102" Wide, 96" Wide Trailer
10	1	14522	Steel Cross Tube 108" Wide, 102" Wide Trailer
11	2	13632-1.3	Black Rubber Bumper One Piece Arm, 3"
**	1	16084	Hardware Kit for Bulletproof Arm Upper Assembly
OPTIONAL ITEMS			
12	2	13373	Upper Bulletproof Arm Casting
13	1	13602	Bulletproof Cross Tube, Aluminum, 96" Length
**	2	13730-A	Rubber Centering Flange for Aluminum Cross Tube
**	2	13913	Tarp Collar Clamp
14	2	11177	Aluminum Stop Bracket w/ Rubber Bumper
15	1	14997	Arm Hold Down Kit
16A	1	14191	7-Spring Underbody Assembly - Left - Drivers Side
16B	1	14192	7-Spring Underbody Assembly - Right - Passengers Side
16A	1	13954	10-Spring Underbody Assembly - Left - Drivers Side
16B	1	13955	10-Spring Underbody Assembly - Right - Passengers Side
**	1	15677	30 Degree Elbow Kit for Bulletproof Arms

**Item not shown. *Oversized items, over length shipping rates apply.

ALUMINUM TARP SPOOL

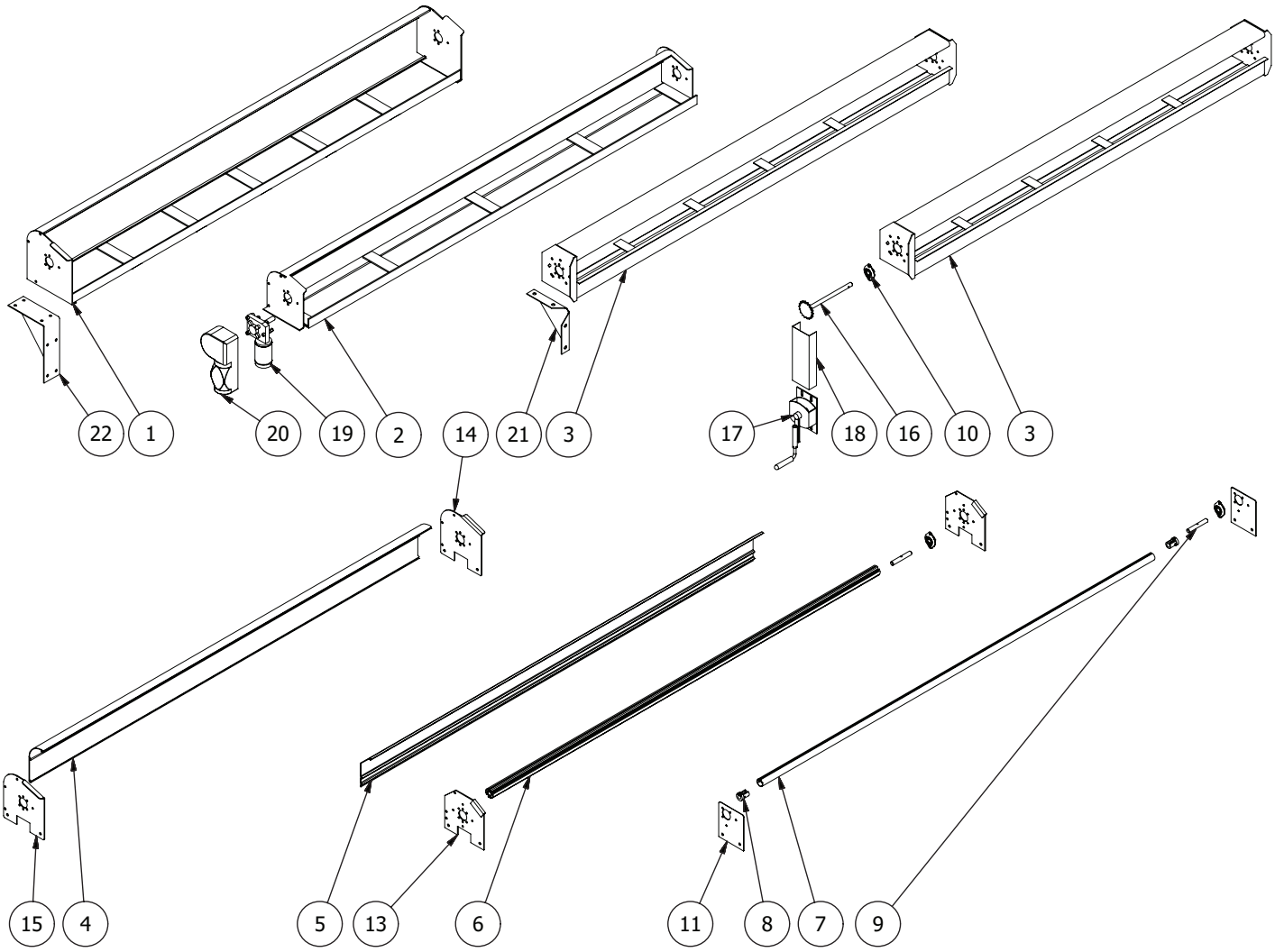

ALUMINUM TARP SPOOL

REF.	QTY	PART #	DESCRIPTION
ALUMINUM TARP SPOOL			
1	1	15089	Large Aluminum Tarp Housing, up to 102" width
2	1	14824	Open Top Aluminum Housing, up to 102" width
3	1	11211	Aluminum Tarp Spool Housing, 92"
3	1	11210	Aluminum Tarp Spool Housing, 98"
3	1	11286	Aluminum Tarp Spool Housing, 104"
4	1	14870	Smooth Front Aluminum Wind Deflector, up to 102" width
5	1	11208	Polished Aluminum Wind Deflector, 103" width
5	1	11380	Polished Aluminum Wind Deflector, 97" width
6	1	11200	2" Heavy Duty Aluminum Tarp Axle, 101-5/8" width
6	1	11385	2" Heavy Duty Aluminum Tarp Axle, 95-5/8" width
7	1	13967	1-1/2" Aluminum Tarp Axle, 103" width
8	2	13943	1-1/2" Tarp Axle Cap
9	1	11201	Spool Shaft, 5"
10	1-2	11139	3/4" Axle Bearing
11	2	11366	Steel Tarp Spool Mounting Bracket
11	2	11366-6mm	Heavy Duty Steel Tarp Spool Mounting Bracket
12	2	11143	Bumper for Tarp Spool Mounting Bracket
13	2	11295	Aluminum Tarp Spool Mounting Bracket with Bumper
14	1	14983R	Smooth Front Wind Deflector Mounting Bracket, Right - Passengers Sid
15	1	14983L	Smooth Front Wind Deflector Mounting Bracket, Left - Drivers Sid
16	1	12357	Upper 18-Tooth Sprocket & Shaft
17	1	11668	Ground Level Crankbox
**	1	11285	#40 Chain with Master Link, 12 ft
18	1	12230	Optional Steel Chain Guard
19			See page 4
20			See page 4
21	4	11209	Aluminum Housing Support Braces, each
22	2	14835	Open Top Housing Support Brace, each

**Item not shown. *Oversized items, over length shipping rates apply.

AERO®

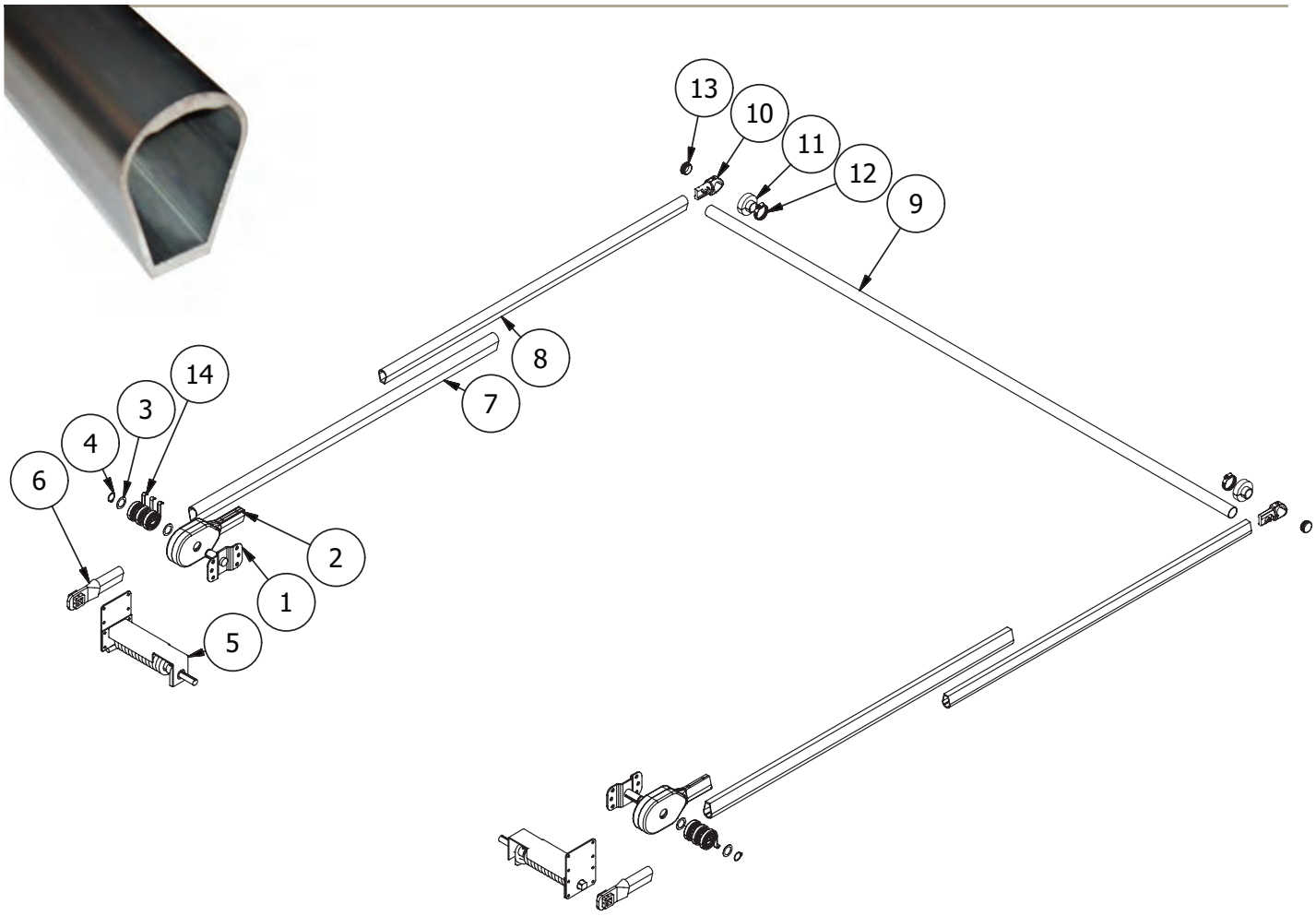

Mounting Bracket Spring

Part #0311-860237

Powerpack 3-Spring Assembly, Single Side

Part #0311-960389

Spring Side Mount, Double Torsion

Part #0715-619550

Undermount Spring Assembly 5/8" PS

Part #0311-960347

End Fitting E/C

Part #0311-864103

Steel Arm End

Part #0311-861151

Rubber Tarp Centering Flange

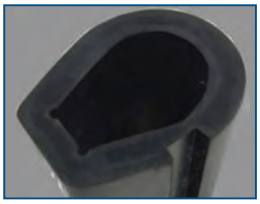

Part #0311-862272

Teardrop Upper Corner

Part #0311-863014

AERO®

REF.	QTY	PART #	DESCRIPTION
AERO® POWERPACK REPLACEMENT PARTS			
1	2	0311-860237	Mounting Bracket for Spring
2	2	0311-964022	Powerpack Casting Kit
3	4	0820-680411	1-1/4" Flat Washer
4	2	0311-860902	Retaining Ring, 1-1/4"
14	6	0715-619550	Spring Side Mount, Double Torsion
AERO® UNDERMOUNT SPRING COMPONENTS			
5	1	0311-960347	U.B. Spring Assembly 5/8" Right - Passengers Side
**	1	0311-960346	U.B. Spring Assembly 5/8" Left - Drivers Side
6	2	0311-864103	End Fitting E/C
AERO® SWING ARM REPLACEMENT PARTS			
7	2	0311-861802	10' - 13' Swing Arm Lower, 62"
7	2	0311-861803	14' - 21' Swing Arm Lower, 89"
7	2	0311-861804	22' - 25' Swing Arm Lower, 123" *
7	2	0311-861805	26' - 28' Swing Arm Lower, 150" *
7	2	0311-861806	29' - 32' Swing Arm Lower, 187" *
7	2	0311-861807	33' - 40' Swing Arm Lower, 215" *
7	2	0311-861908	41' - 49' Swing Arm Lower, 240" *
8	2	0311-861812	Swing Arm Upper, 54"
8	2	0311-861824	Swing Arm Upper Bent, 54"
8	2	0311-863615	Swing Arm Upper, 132" *
9	1	0311-860706	Cross Arm Rear 107.5" Wide, 14ga Steel
10	2	0311-861151	Arm End – Steel
**	2	0311-863014	Teardrop Upper Corner
**	1	0311-860530	Aero Legacy Teardrop Cross Tube – 98"
**	1	0311-860531	Aero Legacy Teardrop Cross Tube – 104"
**	1	0311-860532	Aero Legacy Teardrop Cross Tube – 108"
11	2	13941	Rubber Tarp Centering Flange
12	2	13913	Tarp Collar Clamp
13	2	0311-862135	Plug End 1-3/4" Dia Tube
**	1	15679	Tarp Centering Spring Kit
AERO® MISCELLANEOUS REPLACEMENT PARTS			
**	1	0710-602155	1" Stamped Steel Flange Bearing, 3-1/4" C.D.
**	1	0311-980042	Double Arm 10' - 18' System Length*
**	1	0311-980043	Double Arm 19' - 24' System Length*
**	1	0311-962278	Undermount Spring Kit, Both Sides Included

**Item not shown. *Oversized items, over length shipping rates apply.

DONOVAN®

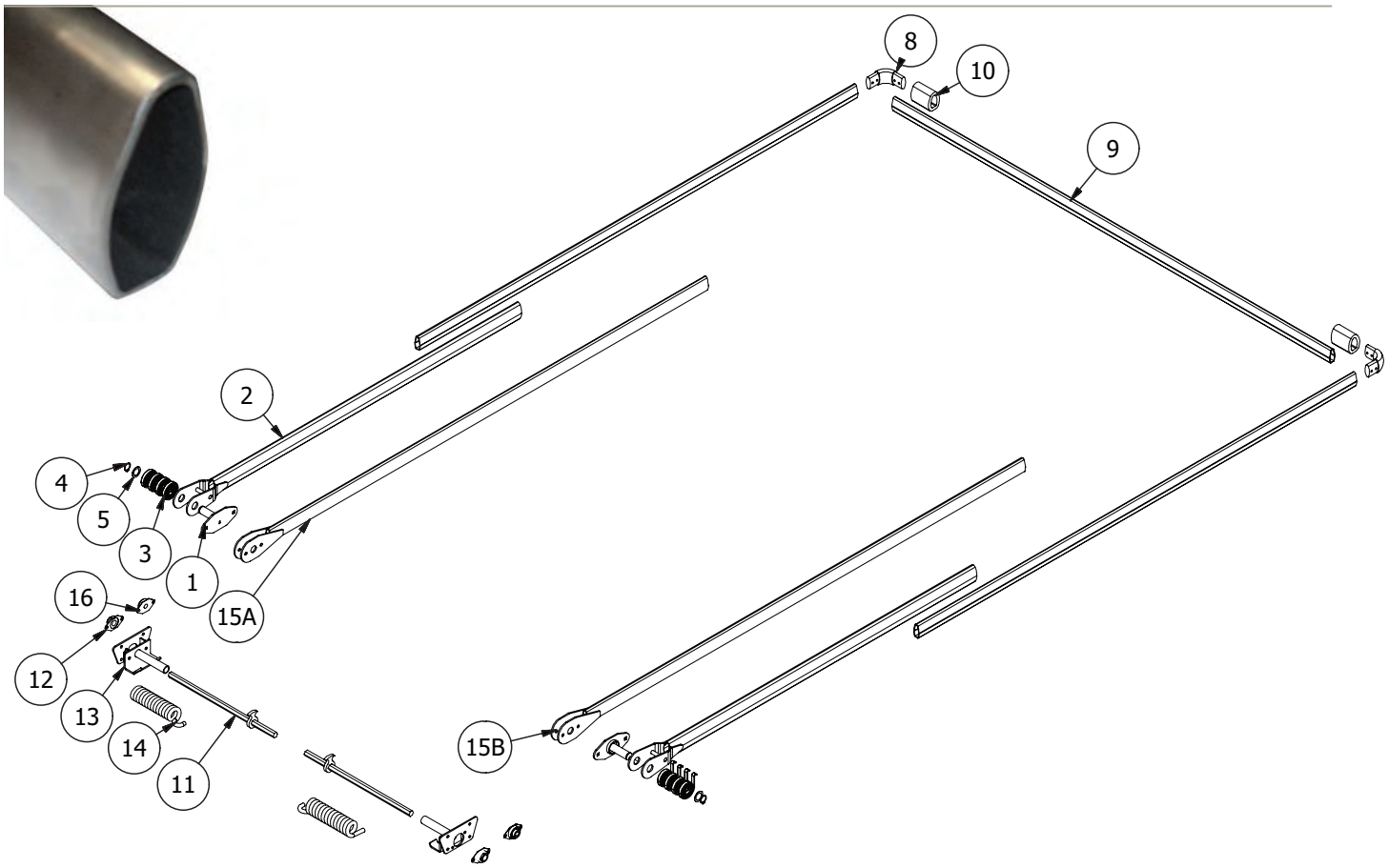

Pivot Arm Mounting Assembly

Part #1787

Pivot Arm Lower

Part #3211

90° Elbow

Part #2842D

Rubber Tarp Stop

Part #3771N

1" Stamped Steel Flange Bearing 3-1/4" CD

Part #3346

Replacement Springs for 7800 Series

DS-Part #427
PS-Part #537

¾" Stamped Steel Flange Bearing 3-1/4" CD

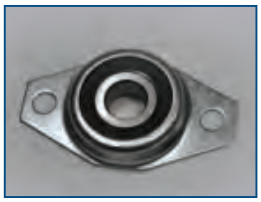

Part #145

Side Mount Extension Spring, 35"

Part #304

DONOVAN®

REF.	QTY	PART #	DESCRIPTION
DONOVAN® SIDE MOUNT REPLACEMENT PARTS			
1	2	1787	Pivot Arm Mounting Assembly
2	2	3211	Pivot Arm, Lower
2	2	3211-HD	Heavy Duty Pivot Arm, Lower (Rodgers & Warren)
3	8	2416	Spring, Flat Coil, Torsion
4	2	2834	Ring, Retaining, 1 1/4"
5	2	2833	Shim, 1 1/4" x .047"
6	1	3244	Pivot Arm, Left - Drivers Side, Upper, 100" with Elbow
7	1	3245	Pivot Arm, Right - Passengers Side, Upper, 100" with Elbow
8	2	2842D	Elbow, 90 degree
9	1	3279	Rear Cross Piece, 100"
10	2	3771N	Rubber Tarp Stop
**	1	1190	30 degree Pivot Arm, Left - Drivers Side, Upper, 100" with Elbow
**	1	1191	30 degree Pivot Arm, Right - Passengers Side, Upper, 100" with Elbow
DONOVAN® UNDERBODY MOUNT REPLACEMENT PARTS			
11	1	3657	Spring Shaft Welded Assembly
12	1	3346	1" Round Flange Bearing
13	1	3658	Pivot Mounting Plate Assy., U/B
**	1	1037	Spring, 21-coil Torsion Spring, Left - Drivers Side
14	1	1039	Spring, 21-coil Torsion Spring, Right - Passengers Side
**	1	3944	Pivot Arm, Left - Drivers Side, Lower Assembly
15	1	3945	Pivot Arm, Right - Passengers Side, Lower Assembly
6	1	3947	Pivot Arm, Left - Drivers Side, Upper 120" with Elbow*
7	1	3948	Pivot Arm, Right - Passengers Side, Upper 120" with Elbow*
**	2	1184	Pivot Arm, Upper, 120" no Elbow*
**	1	1190	30 degree Pivot Arm, Left - Drivers Side, Upper, 100" with Elbow
**	1	1191	30 degree Pivot Arm, Right - Passengers Side, Upper, 100" with Elbow
DONOVAN® MISCELLANEOUS REPLACEMENT PARTS			
**	2	116	Side Mount Extension Spring, 25"
**	2	304	Side Mount Extension Spring, 32"
**	1	427	Left - Drivers Side Replacement Spring for 7800 Series
**	1	537	Right - Passengers Side Replacement Spring for 7800 Series
**	1	145	3/4" Stamped Steel Flange Bearing, 3-1/4" C.D.

**Item not shown. *Oversized items, over length shipping rates apply.

MOUNTAIN TARP™

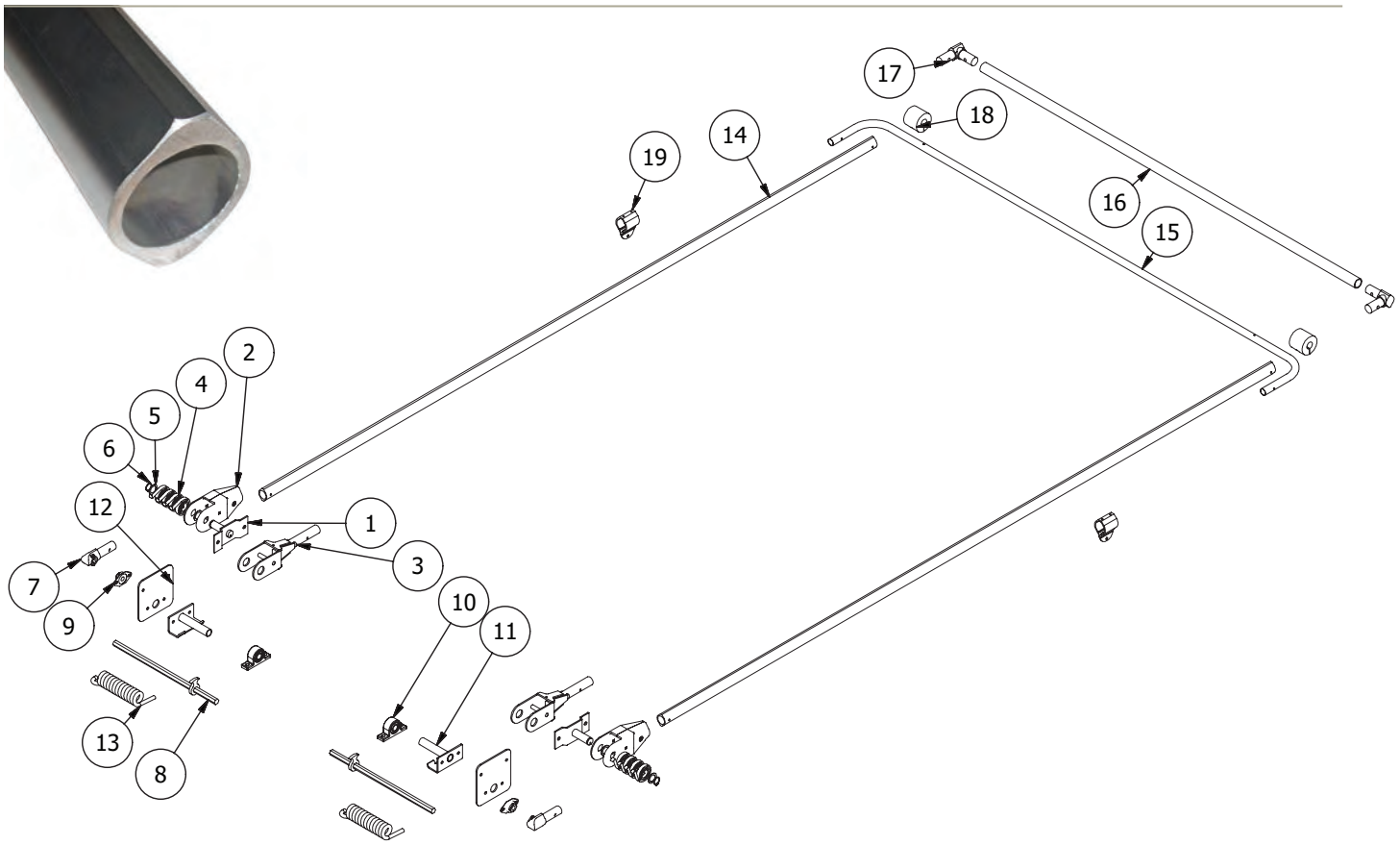

5-Spring Clock Spring Assembly

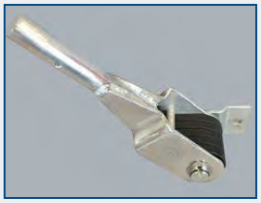

DS – Part #K0260
PS – Part #K0261

Crossover Elbow

Part #K0424E

Donut for Steel Crossover, 4-1/2"

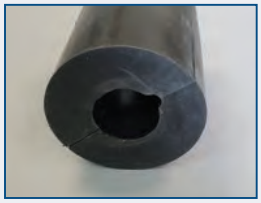

Part #K0420D

Hex Arm Connector

Part #K0416N

Underbody Spring Assembly

DS – Part #K0208
PS – Part #K0207

Hex Spring Holder

Part #K0193

4-Spring Arm Connector Casting, Two-Piece

Part #13942

5-Spring Lower Plug

Part #K0134

MOUNTAIN TARP™

REF.	QTY	PART #	DESCRIPTION
MOUNTAIN TARP™ SIDE MOUNT REPLACEMENT PARTS			
1	2	K0256	4-Spring Mounting Bracket
1	2	K0257	5-Spring Mount Bracket
2	2	K0134A	4-Spring Arm Connector Casting
3	2	K0134B	4-Spring Lower Plug
3	2	K0134	5-Spring Lower Plug
4	8-10	K0199	Side Mount Spiral Spring
5	4	14434	Brass Bushing
6	2	K0258	Snap Ring
**	1	K0260	5-Spring Clock Spring Assembly Left - Drivers Side
**	1	K0261	5-Spring Clock Spring Assembly Right - Passengers Side
MOUNTAIN TARP™ SIDE/UNDER MOUNT REPLACEMENT PARTS			
7	2	K0416N	Hex Arm Connector
8	2	K0536C	Chrome Hex C/R w/Clip 12"
8	2	K0522C	Chrome Hex C/R w/Clip 14.5"
8	2	K0536	Cold Roll w/ clip, total length: 12"
8	2	K0522	Cold Roll w/ clip, total length: 19"
8	2	K0524	Cold Roll w/ clip, total length: 24"
8	2	K0525	Cold Roll w/ clip, total length: 27"
8	2	K0631 & K0531	Cold Roll w/ clip, total length: 31"
8	2	K0526	Cold Roll w/ clip, total length: 54"
8	2	K0522C	Chrome Hex C/R w/ Clip 14.5"
8	2	K0537C	Hex Shaft, total length: 19"
8	2	K0538	Hex Shaft, total length: 24"
8	2	K0539	Hex Shaft, total length: 27"
9	2	K0515	1" Round Cast Iron Flange Bearing, 3-57/64" C.D.
9	2	K0515H	7/8" Hex Cast Iron Flange Bearing, 3-57/64" C.D.
10	2	K0520	1" Round Cast Iron Pillow Block Bearing, 4-1/8" C.D.
10	2	K0520H	7/8" Hex Cast Iron Flange Bearing, 4-1/8" C.D.
11	2	K0193	Hex Spring Holder
12	2	K0192	Spring Plate - Steel
13	1	K0502	Spring 5/8" 3300 Right - Passengers Side
**	1	K0501	Spring 5/8" 3300 Left - Drivers Side
MOUNTAIN TARP™ ARM REPLACEMENT PARTS			
14	2	K0405	Standard Arm 10' *
14	2	K0407	Standard Arm 12' *
14	2	K0409	Standard Arm 14' *
14	2	K0411	Standard Arm 16' *
14	2	K0414E	Standard Arm 20' *
**	2	-BA	Add 30 Degree Bend in any Arm, per bend
14	2	KS6251E	Teardrop Arm 24', cannot be bent *
15	1	K0420	Steel Crossover 102" Wide for 96" Wide Trailer
15	1	K0422	Steel Crossover 108" Wide for 102" Wide Trailer
16	1	K0424P	Aluminum Crossover, 1-1/2" x 8'6"
17	2	K0424E	Crossover Elbow
18	2	K0420D	4-1/2" Black Donut for Steel Crossover
18	2	K0424D	4-1/2" Long Black Donut for Aluminum Crossover

**Item not shown. *Oversized items, over length shipping rates apply.

ROLL RITE®

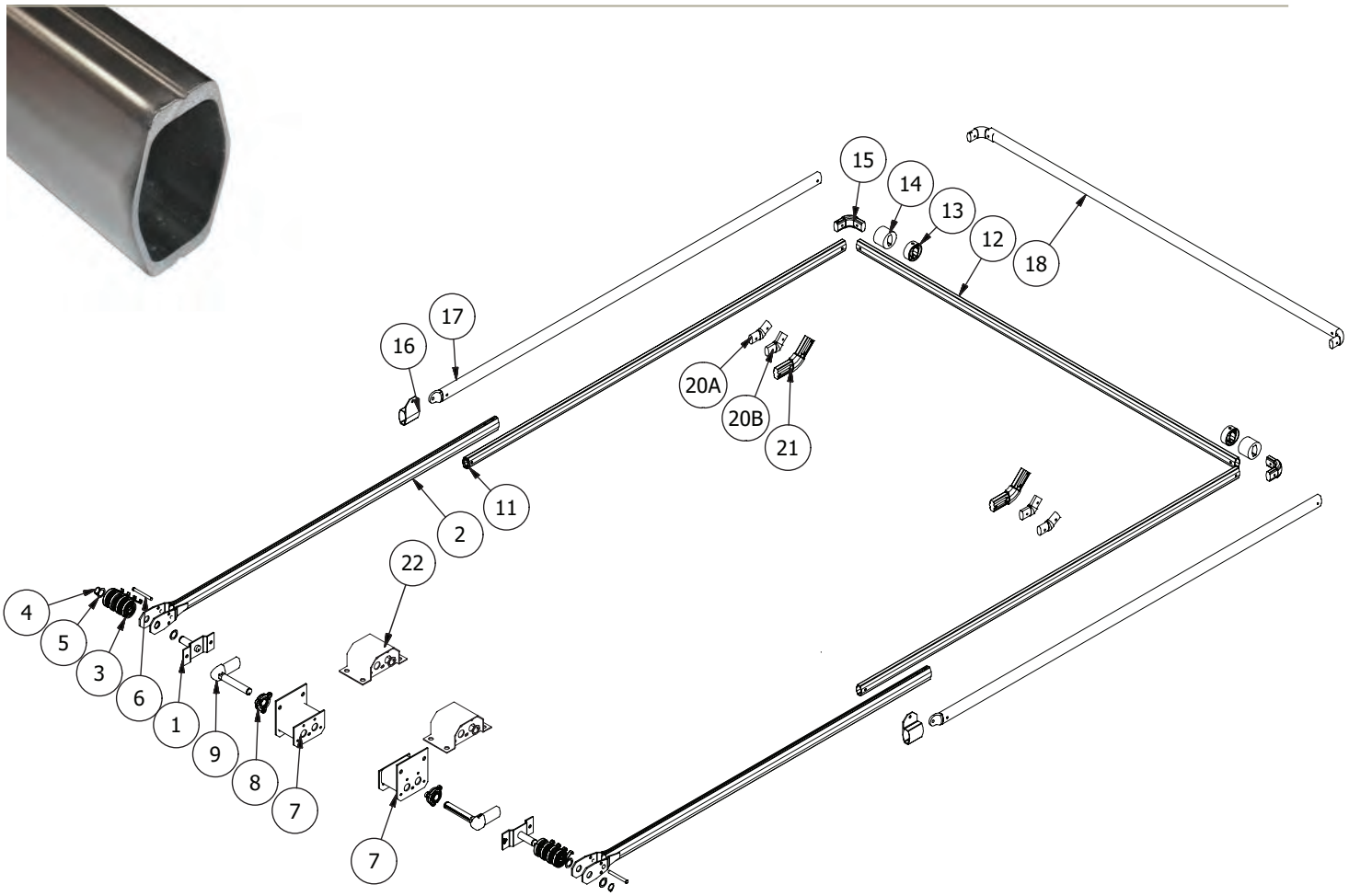

Extreme 45° Lower Arm Elbow Casting

Part #76915

Tension Bow Mounting Bracket

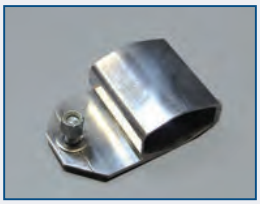

Part #76830

Pivot Pin for 5 or 6 Spring Underbox

DS-Part # 46360
PS-Part #46370

6-Spring Underbody Pivot

DS-Part #46070
PS-Part #46080

ROLL RITE®

REF.	QTY	PART #	DESCRIPTION
ROLL RITE® EXTERNAL MOUNT REPLACEMENT PARTS			
1	2	45330	3-Spring Pivot Pin, Steel
1	2	45340	4-Spring Pivot Pin, Steel
1	2	45350	5-Spring Pivot Pin, Steel
2	2	46130	3-Spring External Mount Pivot Arm, 48"
2	2	46130-31	3-Spring External Mount Pivot Arm, 31"
2	2	46140	4-Spring External Mount Pivot Arm, 84"
2	2	46140-60	4-Spring External Mount Pivot Arm, 60"
2	2	46150	5-Spring External Mount Pivot Arm, 84"
3	6-10	47230	Spiral Torsion Spring
4	2	47000	Snap Ring for Pivot Pins
5	4	47010	Bushing for Pivot Pins
6	2	18560	1/2" x 4-1/8" Clevis Pin for 5-Spring Pivot Only
ROLL RITE® PIVOT REPLACEMENT PARTS			
7	1	46010	Bracket for 5 or 6-Spring Underbody Pivots, Left - Drivers Side
7	1	46020	Bracket for 5 or 6-Spring Underbody Pivots, Right - Passengers Side
7	1	47520	Bracket for 8-Spring Underbody Pivots, Left - Drivers Side
7	1	47530	Bracket for 8-Spring Underbody Pivots, Right - Passengers Side
7	1	46090	Assembled 5-Spring Underbody Pivot, Left - Drivers Side
7	1	46100	Assembled 5-Spring Underbody Pivot, Right - Passengers Side
7	1	46070	Assembled 6-Spring Underbody Pivot, Left - Drivers Side
7	1	46080	Assembled 6-Spring Underbody Pivot, Right - Passengers Side
7	1	47500	Assembled 8-Spring Underbody Pivot, Left - Drivers Side
7	1	47510	Assembled 8-Spring Underbody Pivot, Right - Passengers Side
22	1	46480	6-Spring Fender/Top Mount Spring Assembly, Right - Passengers Side
22	1	46470	6-Spring Fender/Top Mount Spring Assembly, Left - Drivers Side
22	1	47470	8-Spring Fender/Top Mount Spring Assembly, Left - Drivers Side
22	1	47480	8-Spring Fender/Top Mount Spring Assembly, Right - Passengers Side
8	4	47800	1-1/4" Carrier Bearing
9	1	46360	Pivot Pin for 5 or 6-Spring Underbody, Left - Drivers Side
9	1	46370	Pivot Pin for 5 or 6-Spring Underbody, Right - Passengers Side
9	1	47400	Pivot Pin for 8-Spring Underbody, Left - Drivers Side
ROLL RITE® BOW REPLACEMENT PARTS			
11	2	76760	Side Arm w/Corner for Tarp Bow, 98"
12	1	76770	Standard Top Tube for Tarp Bow, 98"
12	1	76870	Wide Top Tube for Tarp Bow, 103-1/2"
13	2	76810	Plastic Tarp Centering Flange (per pair)
14	2	15369	Rubber Tarp Centering Flange (each)
15	2	76800	90 Degree Corner
ROLL RITE® TENSION BOW REPLACEMENT PARTS			
16	2	76830	Tension Bow Mounting Bracket
17	2	76780	Side Arm, w/ End Tab for Tension Bow, 98"
17	2	76880	Long Side Arm, w/ End Tab for Tension Bow, 103"
18	1	76790	Standard Top Tube w/ Corners for Tension Bow, 98"
18	1	76890	Wide Top Tube w/ Corners for Tension Bow, 105-1/2"
19	2	76820	Tension Bow End Tab
ROLL RITE® MISCELLANEOUS REPLACEMENT PARTS			
**	1	31050	3/4" Cast Iron Flange Bearing 2-13/16" C.D.
20	2	76900	Aluminum 30 Degree Elbow
20	2	76910	Aluminum 45 Degree Elbow
21	2	76915	Extreme 45 Degree Lower Arm Elbow Casting

**Item not shown. *Oversized items, over length shipping rates apply.

CAB LEVEL WIND TARP SYSTEM

PART #	DESCRIPTION
COMPLETE CAB LEVEL WIND UP PARTS	
13375	Base System - No Wind Deflector or Housing
13484	Rear Pull Bar Assembly
13463	103" Wide Wind Deflector
13396	Rear Pull Bar & Wind Deflector

Fold Away Crank Handle

Part #11661

Steel 3 Hole Mounting Bracket

Part #13371

Rear Pull Bar Assembly

Part #12311

Locking Ratchet Assembly

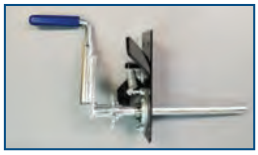

Add -**R** to System

Adj Assembled Tarping

Add **-A** to System

Adj Assembled Tarping System
3" Roller

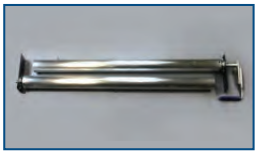

Add **-A3** to System

CAB LEVEL WIND TARP SYSTEM

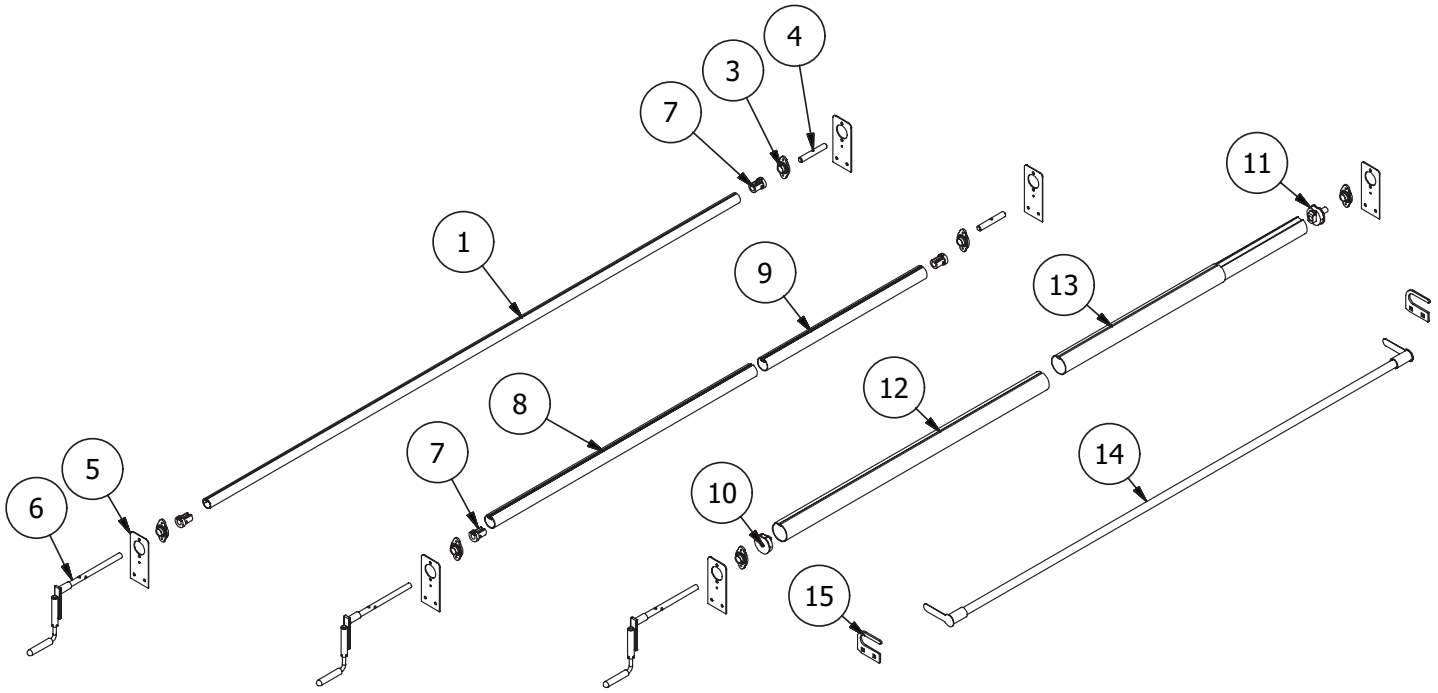

REF.	QTY	PART #	DESCRIPTION
CAB LEVEL WIND UP PARTS			
1	1	13967	1-1/2" Aluminum Tarp Axle, 103" width
2	2	13943	1-1/2" Tarp Axle Cap
3	1	11139	3/4" Axle Bearing
4	1	11201	Spool Shaft, 5"
5	2	13371	Steel 3-Hole Mounting Bracket
6	1	11661	Fold-Away Crank Handle for Cab Level
7	2	12382	2" Tarp Axle Cap
8	1	14861	2" Hollow Tarp Axle, 51" length
9	1	14860	2" Hollow Tarp Axle, 31" length with connector
10	1	13749	3" Tarp Axle Cap, Left - Drivers Side
11	1	13908	3" Tarp Axle Cap, Right - Passengers Side with Spool Shaft
12	1	15519	3" Hollow Tarp Axle, 51" length
13	1	15520	3" Hollow Tarp Axle, 31" length with connector
14	1	14581	Aluminum Rear Pull Bar Assembly, No Rope Kit or Tailgate Latches
14	1	12311	Aluminum Rear Pull Bar Assembly with Rope Kit and Tailgate Latches
15	2	12283	Steel Tailgate Latch
**	4	12282	Aluminum J Hook
**	1	14988-KIT	Rope Kit with Bungee and Rings

**Item not shown. *Oversized items, over length shipping rates apply.

PULL STYLE SPRING RETURN TARP SYSTEM

PART #	DESCRIPTION
COMPLETE PULL STYLE SPRING RETURN TARP SYSTEM	
13429	Base System - No Wind Deflector or Housing
13391	97" Wind Deflector
15478	102" Smooth Front Wind Deflector
15479	Open Top Housing, up to 102" Wide
165	Adjustable Steel Housing, 81" to 96" Wide
13430	92" Wide Aluminum Housing
13431	98" Wide Aluminum Housing
13432	104" Wide Aluminum Housing
-HD	Covers up to 32'

Adj. Width Spring Return Roller Assembly

Part #99

Spring Return Roller Assembly, Fixed Width

Part #13402

Pull Style Adapter Plate

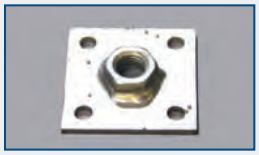

Part #14010

Rear Pull Bar Assembly

Part #12311

Adjustable Steel Housing

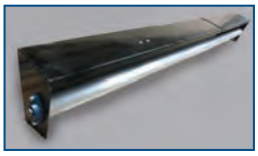

Part #15203

Optional Polished Aluminum Wind Deflector

Part #11380

PULL STYLE SPRING RETURN TARP SYSTEM

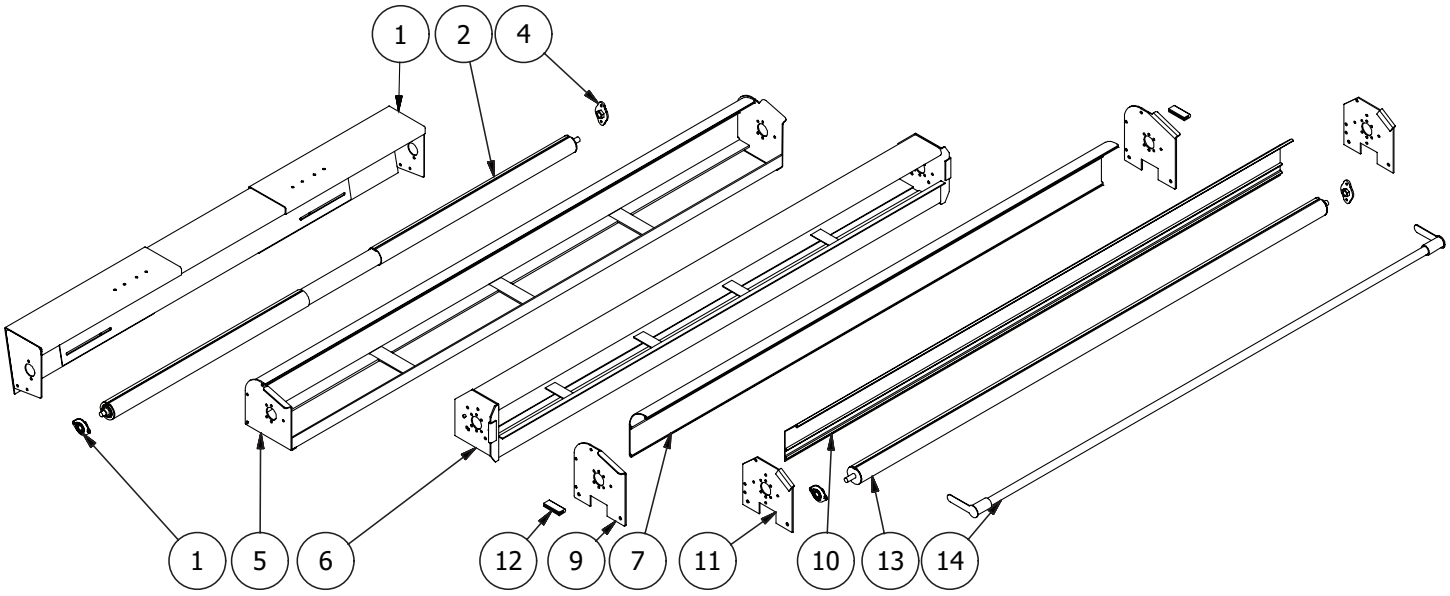

REF.	QTY	PART #	DESCRIPTION
PULL STYLE SPRING RETURN PARTS			
1	1	15203	Adjustable Width Steel Housing
2	1	99	Adjustable Width Spring Return Roller Bar Assembly
3	1	11139	3/4" Axle Bearing
4	1	14010	Pull Style Adaptor Plate
5	1	14824	Open Top Aluminum Housing, up to 102" width
6	1	11211	Aluminum Tarp Spool Housing, 92"
6	1	11210	Aluminum Tarp Spool Housing, 98"
6	1	11286	Aluminum Tarp Spool Housing, 104"
7	1	14870	Smooth Front Aluminum Wind Deflector, up to 102" width
8	1	14983R	Smooth Front Wind Deflector Mounting Bracket, Right - Passengers Side
9	1	14983L	Smooth Front Wind Deflector Mounting Bracket, Left - Drivers Side
10	1	11208	Polished Aluminum Wind Deflector, 103" width
10	1	11380	Polished Aluminum Wind Deflector, 97" width
11	2	11295	Aluminum Tarp Spool Mounting Bracket with Bumper
12	2	11143	Bumper for Tarp Spool Mounting Bracket
13	1	13402	Spring Return Roller Bar Assembly
14	1	14581	Aluminum Rear Pull Bar Assembly, No Rope Kit or Tailgate Latches
14	1	12311	Aluminum Rear Pull Bar Assembly with Rope Kit and Tailgate Latches
**	1	14988-KIT	Rope Kit with Bungee and Rings

**Item not shown. *Oversized items, over length shipping rates apply.

SAFE-T-LIFT™ TARP SYSTEM

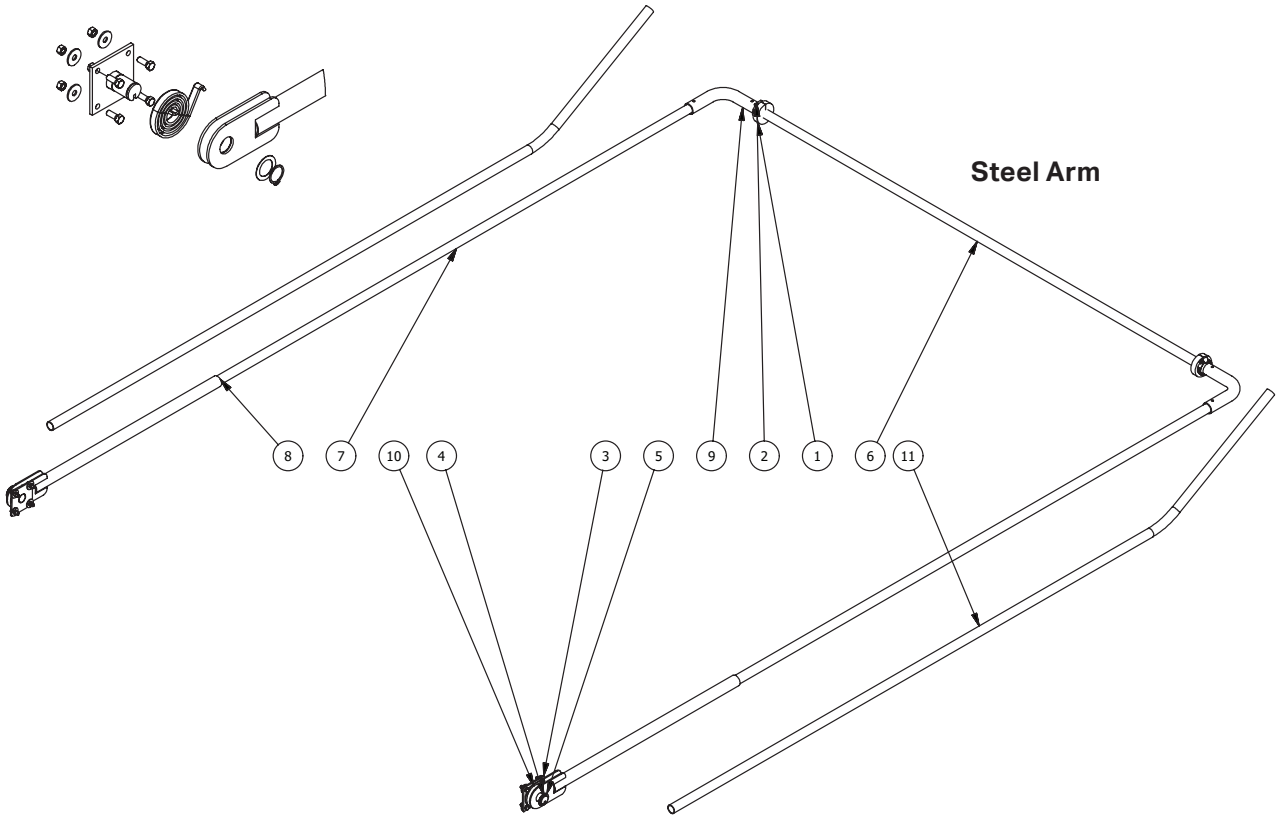

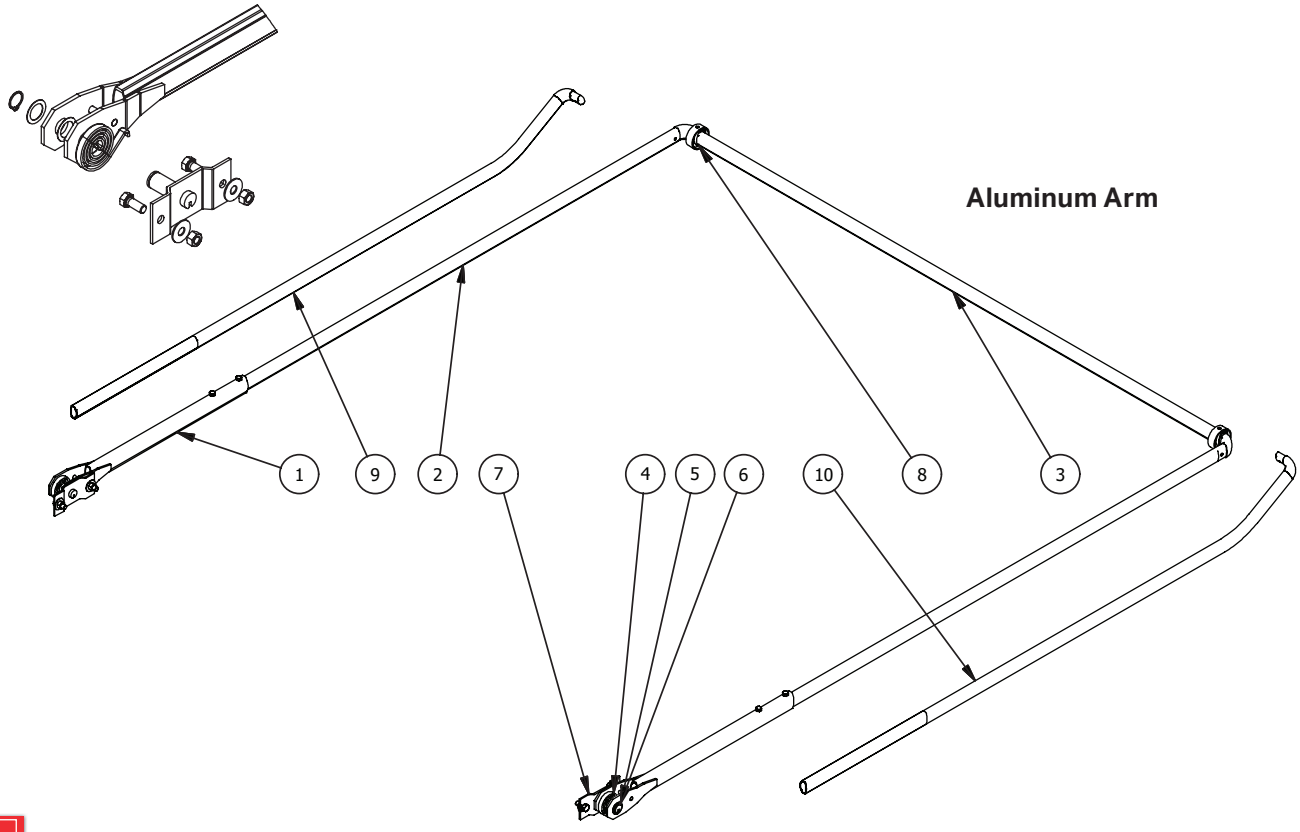

SAFE-T-LIFT™ TARP SYSTEM

REF.	QTY	PART #	DESCRIPTION
STEEL ARM PARTS			
1	2	13941	Rubber Tarp Centering Flange
2	2	13913	Hose Clamp
3	2	14470	Tension Hoop Mounting Pin
4	2	11142	Retaining Ring
5	4	11141	Stainless Steel Bushing
6	1	11269	Steel Cross Tube, 96" Long
7	2	11268	Steel Upper Side Arm, 120" Long
8	2	14471-36	Tension Hoop Pivot Arm with Zinc Plating, 36"
9	2	11267	Steel 90º Corner
10	2	11121	Spiral Torsion Spring
11	2	11268-BA	30º Bent Steel Upper Side Arm, 120" Long

REF.	QTY	PART #	DESCRIPTION
ALUMINUM ARM PARTS			
1	2	11244	3-Spring Lower Aluminum Arm, 31" Long
2	2	11231	Aluminum Side Arm with Corner
3	1	11232	Aluminum Side Arm 98" Long
4	2	11121	Spiral Torsion Spring
5	4	11141	Stainless Steel Bushing
6	2	11142	Retaining Ring
7	2	11183	3-Spring Pivot Pin
8	2	11231	Plastic Tarp Centering Flange - Black
9	1	11236-BA-R	Aluminum Side Arm with Corner, Bent Passenger Side Right
10	1	11236-BA-L	Aluminum Side Arm with Corner, Bent Driver Side Left

**Item not shown. *Oversized items, over length shipping rates apply.

GANTRY TARP SYSTEM

GANTRY TARP SYSTEMS
STATIONARY PULL STYLE – 15101
No Electrical
Stationary Mounting Kit
STATIONARY WITH ARM KIT – 15101-(ARM#)
Includes 12250-WATERPROOF
Stationary Mounting Kit
54" STATIONARY – 15101-54-(ARM#)
Pull Style or Electric Arm Kit Available
Stationary Mounting Kit
Economical Medium-Duty Design

Part Number Format

15101 - AL4

Model # | Optional Arm Kit

SPEC	54" STATIONARY SPECS	77" STATIONARY SPECS
ECONOMY GANTRY UNITS		
Frame Height	54"	77"
Extends	N/A	N/A
Overall Height w/Housing	62"	85"
Weight	225 lbs. (assembled) w/o Tarp or Arm Kit	300 lbs. (assembled) w/o Tarp or Arm Kit
Coverage*	Up to (but not including) 30 Yard Container	Up to (but not including) 40 Yard Container
	*Not Recommended for 30 Yard Containers *Not Recommended for containers over 62" tall	*Not Recommended for 40 Yard Containers *Not Recommended for containers over 85" tall

**Item not shown. *Oversized items, over length shipping rates apply.

GANTRY TARP SYSTEM

PREMIUM SINGLE STAGE GANTRY TARP SYSTEM
SINGLE STAGE PULL STYLE – 15100
Base Spring Return Axle - Assembled
NEW – Gantry Control Box for Powerpack
SINGLE STAGE WITH ARM KIT – 15100-(ARM#)
Includes Standard Control Box with Plug and Play
LED Work Lights Included and Wired
Wireless Upgrade available
PREMIUM HYDRAULIC SINGLE STAGE – 15100-P
Wireless Remote Included
Standard Aluminum 4-Spring Arms Included
Flow Divider for PTO Included
60:1 Hydraulic Tarp Motor

Part Number Format

15100 - AL4 - WL

Model # | Optional Arm Kit | Wireless Option

SPEC	MEASUREMENT (IN)
PREMIUM SINGLE-STAGE GANTRY SYSTEM WITH POWERPACK	
Assembled Frame Height	60"
Extends	36"
Overall Height w/Housing	96"
Weight	375 lbs. (assembled) w/o Tarp or Arm Kit
Coverage*	Up to 40 Yard Container

*Not Recommended for 40 Yard Containers
*Not Recommended for containers over 96" tall

GANTRY TARP SYSTEM

PREMIUM TWO STAGE GANTRY TARP SYSTEM
TWO STAGE PULL STYLE – 14126
Base Spring Return Axle - Assembled
NEW – Gantry Control Box for Powerpack
TWO STAGE WITH ARM KIT – 14126-(ARM#)
Includes Standard Control Box with Plug and Play
LED Work Lights Included and Wired
Wireless Upgrade available
PREMIUM HYDRAULIC TWO STAGE – 14126-P
Wireless Remote Included
Standard Aluminum 4-Spring Arms Included
Flow Divider for PTO Included
60:1 Hydraulic Tarp Motor

Part Number Format

14126 - AL4 - WL

Model # | Optional Arm Kit | Wireless Option

SPEC	MEASUREMENT (IN)
PREMIUM TWO-STAGE — FULLY HYDRAULIC OR POWERPACK AVAILABLE	
Frame Height	64"
Extends	88"
Overall Height w/Housing	162"
Weight	575 lbs. (assembled) w/o Tarp or Arm Kit
Coverage*	40 Yard Container

**Item not shown. *Oversized items, over length shipping rates apply.

GANTRY TARP SYSTEM

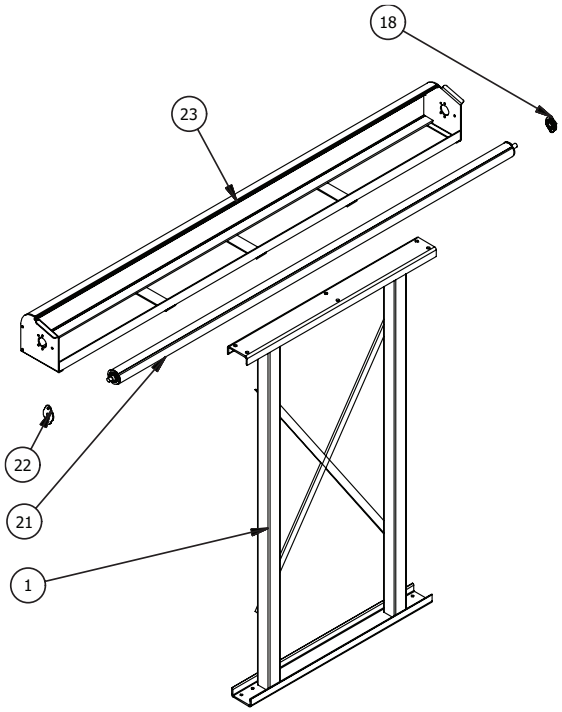

STATIONARY GANTRY

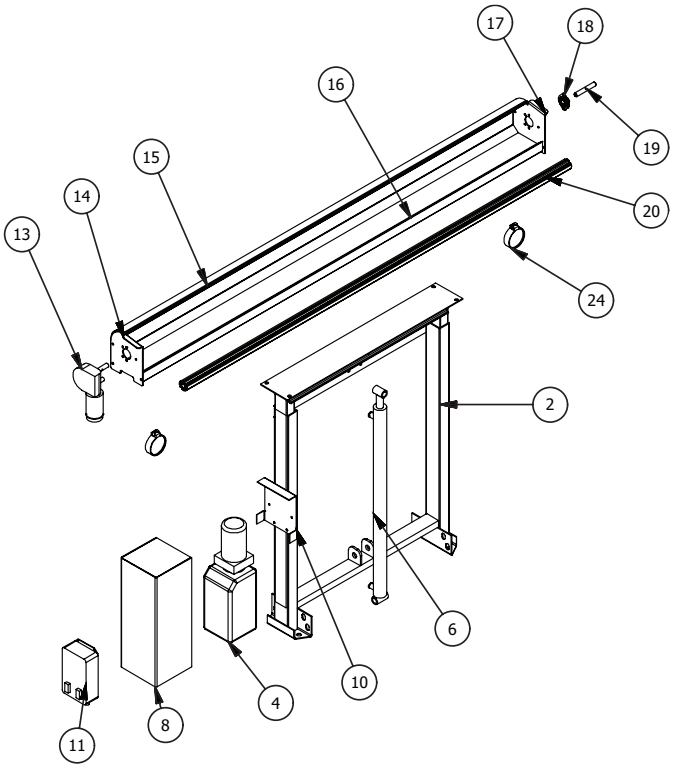

PREMIUM SINGLE STAGE GANTR`

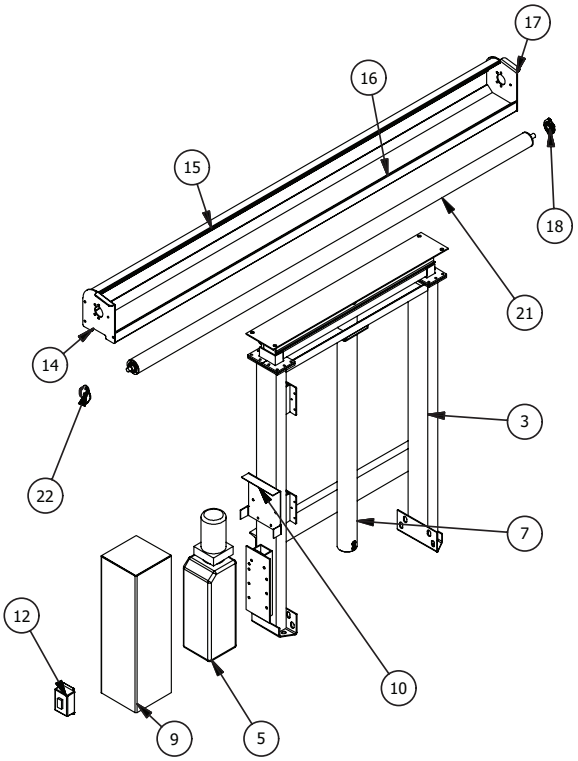

PREMIUM TWO STAGE GANTRY

GANTRY TARP SYSTEM

REF.	QTY	PART #	DESCRIPTION
GANTRY TARP REPLACEMENT PARTS			
1	1	14527	77" Stationary Gantry Frame
1	1	14527-54	54" Stationary Gantry Frame
2	1	15080	48" Single Stage Gantry Frame
2	1	15080-58	58" Single Stage Gantry Frame; Fully Hydraulic Only
3	1	112671	Two Stage Gantry Frame
4	1	13931	12V Powerpack, 6 Qt Reservoir
5	1	16314	12V Powerpack, 10 Qt Reservoir
6	1	14838	Single Stage Hydraulic Cylinder, 36" Stroke
7	1	13901	Two Stage Hydraulic Cylinder, 88" Stroke
8	1	15515	Steel Housing for 6 Qt Powerpack (Single Stage)
9	1	16304	Steel Housing for 10 Qt Powerpack (Two Stage)
10	1	15816	Mounting Bracket for Steel Housing
11	1	16302	Standard Gantry Control Box
11	1	16109	Wireless Gantry Control Box with 5 Function Remote (Optional)
12	1	16310	Pull Style Gantry Control Box
13	1	13732	Bulletproof Tarp Motor, Geared 60:1
14	1	15512L	Heavy Duty Aluminum Housing Endplate, Drivers Side
15	1	14870	Heavy Duty Aluminum Wind Deflector
16	1	15367	Aluminum Housing Base, 98"
17	1	15512R	Heavy Duty Aluminum Housing Endplate, Passengers Side
18	1	11139	3/4" Stamped Steel Flange Bearing
19	1	11201	3/4" Spool Shaft
20	2	11200	2" Heavy Duty Tarp Axle
21	1	14529	Pull Style Axle Assembly
22	1	14010	Pull Style Adapter Plate
23	1	14824	Open Top Housing, 98"
24	2	15755	LED Work Lights
**	2	16313	Mounting Bracket for Stationary Gantries
**	2	16244	5/8" Frame Spacers (Optional)
**	1	15563	5 Function Wireless Remote (Optional) - Compatible with US Tarp Systems Only
**	1	16189	80A Breaker (Single Stage Gantry)
**	1	16274	250A Breaker (Two Stage Gantry)
**	1	12250-WATERPROOF	Waterproof Rocker Switch (Electric Stationary Kit)
**	1	14988-KIT	Rope Kit (Pull Style Gantries)
**	4	12282	J Hooks (Pull Style Gantries)
**	1	H14017	Tailgate Latch Kit (Pull Style Gantries)
**	1	12250-WP-GANTRY	Waterproof Wireless Control Box (Fully Hydraulic Models)
**	1	15964	Flow Regulator (Fully Hydraulic Models)
**	1	16066	Flow Divider Body (Fully Hydraulic Models)
**	1	15732	2- Spool Valve with Electric Actuators
**	1	16232	Relief Valve

**Item not shown. *Oversized items, over length shipping rates apply.

RACK & PINION TARP SYSTEM

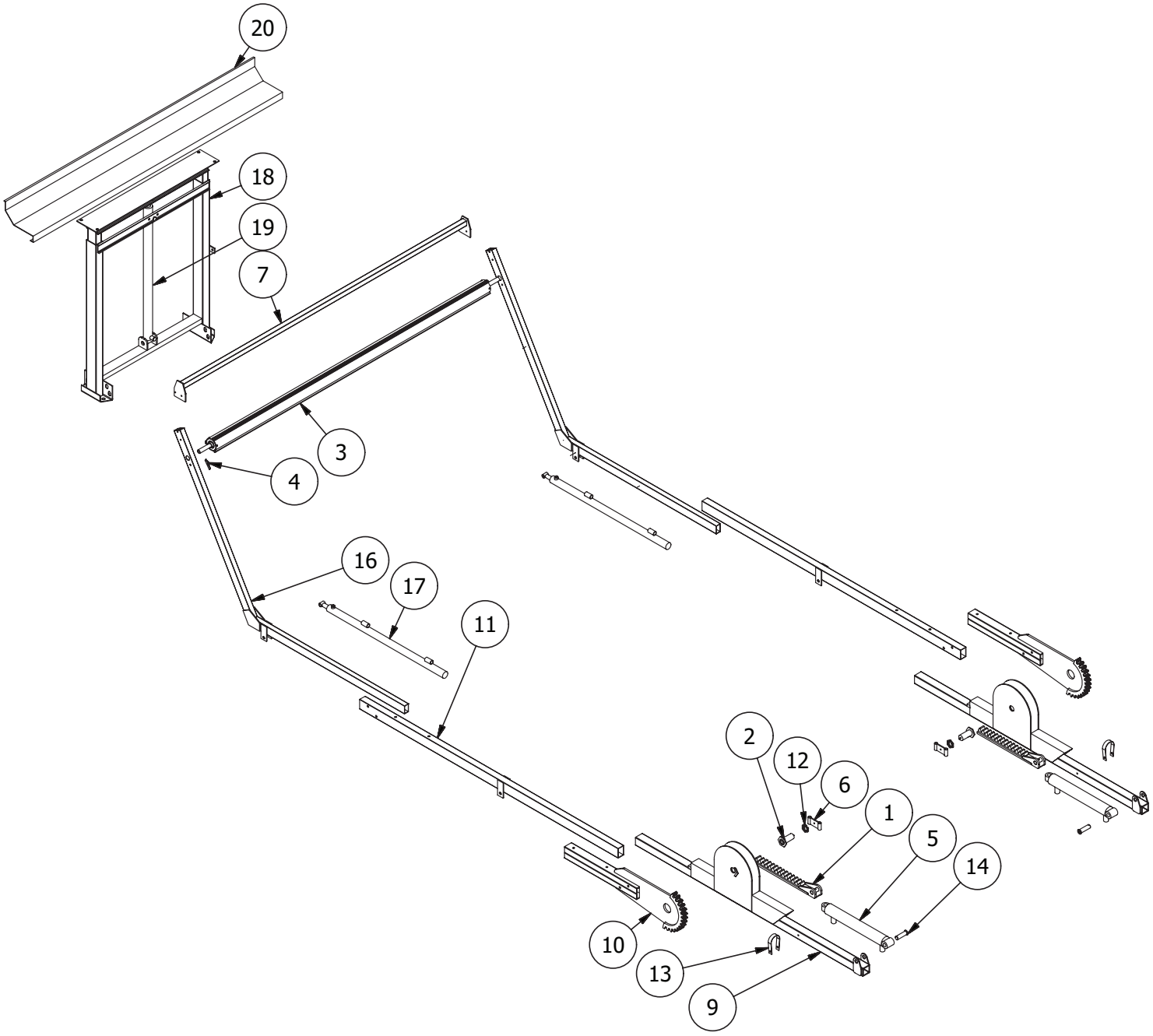

RACK & PINION TARP SYSTEM

REF.	QTY	PART #	DESCRIPTION
RACK & PINION REPLACEMENT PARTS			
1	2	A3868B	Rack Gear Assembly
2	2	A3881	Arm Pivot Pin w/Grease Fitting
3	1	H7002C	Spring Roller Assembly
4	1	HR4788	Pawl for Roller Assembly
5	2	HR4719	16" Stroke Cylinder
6	2	HR4728	Swivel Hose Clamp Assembly
7	1	HR4753	Stabilizer Bar
8	1	A4006A-1	Mounting Bracket Assembly, Right - Passengers Side
9	1	A4005A-1	Mounting Bracket Assembly, Left - Drivers Side
10	2	HR4760	Base Arm Gear Assembly
11	2	HR4750	Base Arm, 93-1/4"
12	2	HR4785	Castle Nut for Pivot Pin
13	2	HR4731	Cylinder Hold Down Strap
14	2	A3883	Cylinder Pin - Long
15	2	D18836	Cylinder Pin
16	2	HR4751	Arm Extension
17	2	HR4752	36" Stroke Telescopic Arm Cylinder
18	1	HR4511	Telescopic Gantry Leg Assembly
18	1	HR4610	Fixed Leg Gantry Tube Set
19	1	HR4520	36" Stroke Gantry Cylinder
20	1	HR4505-2	Roll Base for Telescopic Gantry Assembly
20	1	HR4614	Roll Rest for Fixed Leg Gantry Assembly

**Item not shown. *Oversized items, over length shipping rates apply.

CABLE TARP SYSTEM

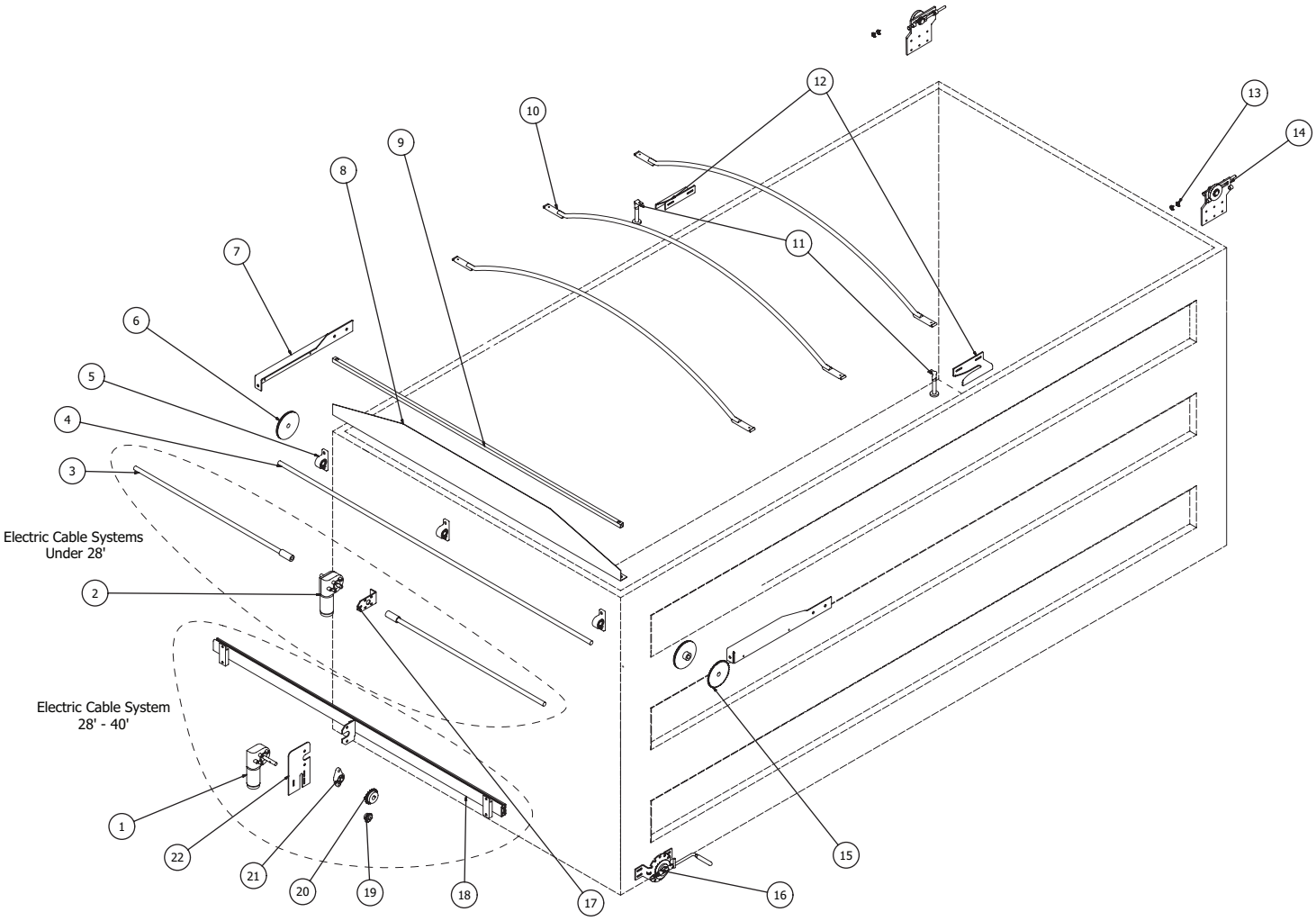

CABLE TARP SYSTEM

REF.	QTY	PART #	DESCRIPTION
CABLE TARP SYSTEM REPLACEMENT PARTS*			
1	1	13957-KEYWAY	90:1 Bulletproof Tarp Motor with Keyway
2	1	13957-DUAL	90:1 Bulletproof Tarp Motor with Dual Shaft
3	2	25631	1" Pulley Shaft with Coupler
4	1	14287	1" Steel Shaft, Cut to Size
5	2 or 3	14533	1" Pillow Block Bearing, 4-1/2 C.D.
6	2	14674	7" Cable Pulley
7	1	15674R	Passenger Side Aluminum Cable Ramp
7	1	15674L	Drive Side Aluminum Cable Ramp
7	1	15674	Cable Ramp Kit
8	1	14291-95	Aluminum Wind Deflector, 95" Length Standard
8	1	14291-101	Aluminum Wind Deflector, 101" for 102" Wide Body
9	1	14288	Steel Tarp Tension Bar, 95" Length Standard
9	1	14288-101	Steel Tarp Tension Bar, 101" for 102" Wide Body
10	Varies	13810	Cable System Bows: 98" Pin Centers x 12" Rise
10	Varies	15188	Cable System Bows: 104" Pin Centers x 12" Rise
10	Varies	14953	Custom Bow: Specify Width and Rise
10	Varies	14954	Custom Bow with Square Sliders: Specify Width and Rise
11	2	15504	6" Anti-Lift Post
11	2	15505	4" Anti-Lift Post (added on Systems 28' and up)
12	1 or 2	15502	Aluminum Anti-Lift Bracket - Drivers Side
12	1 or 2	15503	Aluminum Anti-Lift Bracket - Passenger Side
11, 12	1	14242	6" Anti-Lift Kit
11, 12	1	14242SHORT	4" Anti-Lift Kit (added on Systems 28' and up)
13	4	14290	Cable Clip
14	1	14786A-L	Rear Cable Mount ASM, Aluminum, Driver
14	1	14786A-R	Rear Cable Mount ASM, Aluminum, Passenger
14	1	14786S-L	Rear Cable Mount ASM, Steel, Driver
14	1	14786S-R	Rear Cable Mount ASM, Steel, Passenger
**	Varies	14289	1/4" Steel Aircraft Cable
15	1	14675	42-Tooth Sprocket
16	1	11140	Chain Crank Assembly for Cable System
**	1	11285	#40 Chain, 12'
17	1	15530	Dual Shaft Motor-Mounting Plate
18	1	16342	KBAR Assembly, 95"
18	1	16343	KBAR Assembly, 101"
19	1	14873	#50 3/4" 10-Tooth Single Strand Fin. Bore Sprocket with Key
20	1	14874	#50 1" 18-Tooth Single Strand Fin. Bore Sprocket with Key
**	1	14872	#50 Chain, 1'
21	1	14133	1" Cast Iron Flange-Mount Bearing, 3-57/64" C.D.
22	1	14915-S	Motor-Mounting Plate
**	1	16335	Hardware Kit for Front Pre-Assembly - Electrical Cable System
**	1	16335-M	Hardware Kit for Front Pre-Assembly - Manual Cable System
**	1	16336	Hardware Kit for Cable System - Final Assembly
**	1	12250-ROCKER	12V EZ Switch Kit
**	Varies	11147	6GA Wire, per Foot

LENGTH	VINYL PARTS #	VINYL PART #	LENGTH	MESH PARTS #	MESH PART #
CABLE SYSTEMS REPLACEMENT TARPS*					
16'	102-16-BV-CABLE	108-16-BV-CABLE	16'	92-16-BM-CABLE	100-16-BM-CABLE
18'	102-18-BV-CABLE	108-18-BV-CABLE	18'	92-18-BM-CABLE	100-18-BM-CABLE
20'	102-20-BV-CABLE	108-20-BV-CABLE	20'	92-20-BM-CABLE	100-20-BM-CABLE
22'	102-22-BV-CABLE	108-22-BV-CABLE	22'	92-22-BM-CABLE	100-22-BM-CABLE
24'	102-24-BV-CABLE	108-24-BV-CABLE	24'	92-24-BM-CABLE	100-24-BM-CABLE
26'	102-26-BV-CABLE	108-26-BV-CABLE	26'	92-26-BM-CABLE	100-26-BM-CABLE
28'	102-28-BV-CABLE	108-28-BV-CABLE	28'	92-28-BM-CABLE	100-28-BM-CABLE
30'	102-30-BV-CABLE	108-30-BV-CABLE	30'	92-30-BM-CABLE	100-30-BM-CABLE
32'	102-32-BV-CABLE	108-32-BV-CABLE	32'	92-32-BM-CABLE	100-32-BM-CABLE
34'	102-34-BV-CABLE	108-34-BV-CABLE	34'	92-34-BM-CABLE	100-34-BM-CABLE
36'	102-36-BV-CABLE	108-36-BV-CABLE	36'	92-36-BM-CABLE	100-36-BM-CABLE
38'	102-38-BV-CABLE	108-38-BV-CABLE	38'	92-38-BM-CABLE	100-38-BM-CABLE

*On BV Tarps 102" wide tarps for 96' wide bodies and 108" wide tarps for 102" wide bodies. All part numbers are for 98" side bows, please us the -104 suffix to make any cable part numbers setup for 104" box

**Item not shown. *Oversized items, over length shipping rates apply.

CABLE TARP SYSTEM

LENGTH	VINYL PART #	MESH PART #
MANUAL CRANK CABLE TARP SYSTEMS WITH TARP		
16'	CAB16BV	CAB16BM
18'	CAB18BV	CAB18BM
20'	CAB20BV	CAB20BM
22'	CAB22BV	CAB22BM
24'	CAB24BV	CAB24BM
26'	CAB26BV	CAB26BM
28'	CAB28BV	CAB28BM
30'	CAB30BV	CAB30BM
32'	CAB32BV	CAB32BM
34'	CAB34BV	CAB34BM
36'	CAB36BV	CAB36BM
38'	CAB38BV	CAB38BM
40'	CAB40BV	CAB40BM
ELECTRIC CABLE TARP SYSTEMS WITH TARP		
16'	ECAB16BV	ECAB16BM
18'	ECAB18BV	ECAB18BM
20'	ECAB20BV	ECAB20BM
22'	ECAB22BV	ECAB22BM
24'	ECAB24BV	ECAB24BM
26'	ECAB26BV	ECAB26BM
28'	ECAB28BV	ECAB28BM
30'	ECAB30BV	ECAB30BM
32'	ECAB32BV	ECAB32BM
34'	ECAB34BV	ECAB34BM
36'	ECAB36BV	ECAB36BM
38'	ECAB38BV	ECAB38BM
40'	ECAB40BV	ECAB40BM

Aluminum Front Mounting Bar

ADD -KBAR to System

Polished Aluminum Wind Deflector

Add -WD to System

Dual Conductor Plug Sets Vertical

Vertical Part #11264
Horizontal Part #14566

Set up for 104" Tarp Bow

Add -104 to System

Custom Bow Sizes

Add -C to System

Square Tarp Bow End

Add -SQ to System

90:1 Bulletproof Tarp Motor

Part #13957-KEYWAY

Chain Crank Assembly

Part #11140

#40 Chain/Master Link

Part #11285

Rear Cable Mount Assembly

Part #14786A

SIDE ROLL TARP SYSTEM

BASE SYSTEM	PART #	TARP OPTIONS* -22BV 22 OZ BLACK VINYL	TARP STOP OPTIONS* -ACS ALUMINUM CAST -AC6 ALUMINUM CAST 6" OFFSET	END CAP OPTIONS* -FEC FABRIC END CAPS FRONT & BACK -AEC ALUMINUM END CAPS FRONT & BACK
*LEAVE BLANK FOR STANDARD TARP, TARP STOP AND END CAPS				
Up to 10'	AG10BV	-22BV	-ACS or -AC6	-FEC or -AEC
11' – 15'	AG15BV	-22BV	-ACS or -AC6	-FEC or -AEC
16' – 20'	AG20BV	-22BV	-ACS or -AC6	-FEC or -AEC
21' – 25'	AG25BV	-22BV	-ACS or -AC6	-FEC or -AEC
26' – 30'	AG30BV	-22BV	-ACS or -AC6	-FEC or -AEC
31' – 35'	AG35BV	-22BV	-ACS or -AC6	-FEC or -AEC
36' – 40'	AG40BV	-22BV	-ACS or -AC6	-FEC or -AEC
41' – 45'	AG45BV	-22BV	-ACS or -AC6	-FEC or -AEC
46' – 50'	AG50BV	-22BV	-ACS or -AC6	-FEC or -AEC
51' – 54'	AG54BV	-22BV	-ACS or -AC6	-FEC or -AEC

**Item not shown. *Oversized items, over length shipping rates apply.

SIDE ROLL TARP SYSTEM

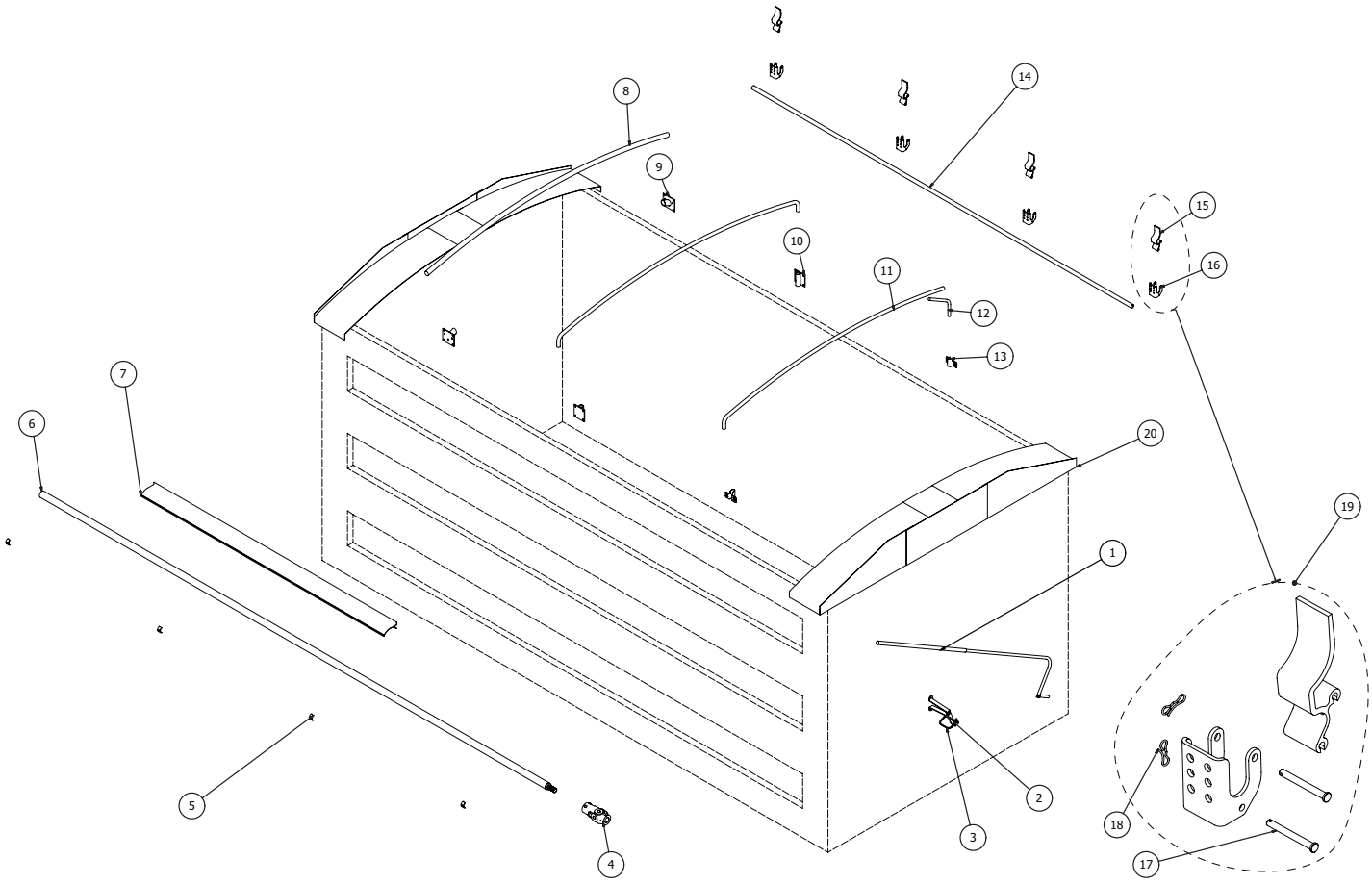

SIDE ROLL TARP SYSTEM

REF.	QTY	PART #	DESCRIPTION
SIDE ROLL SYSTEM REPLACEMENT PARTS*			
1	1	1100816	Standard Crank Arm Kit With 80" Extension
2	2	1100386	Crank Retainer Kit With 7" Standoff
2	2	1107047	Pinless Crank Retainer Kit With 7" Standoff
3	2	1700526	Wire Lock Pin - 3/8" X 2-1/2"
4	1	1701243	Splined U-Joint
5	Varies	1701354	Plastic U-Clamps
6	Varies	1107058	Roll Tube - 2" X 21 Ft With Spline And Swage
7	Varies	15935 (1700522)	Aluminum Side Mount Latch Plate; 8 Ft
7	Varies	15457	Aluminum Side Mount Latch Plate; 21' 6"
8	Varies	1705128	Flex Bow; 1-3/8" Dia. - 97"
8	Varies	1705129	Flex Bow; 1-3/8" Dia. - 102"
9	Varies	1122932	Steel Flex Bow Bracket
9	Varies	1705324	Aluminum Flex Bow Bracket
10	Varies	1109110	Aluminum Bow Bracket
11	Varies	1100760	Galvanized Bow - Low Rise 93" To 102"
11	Varies	1117905	Galvanized Bow - High Rise 89" To 95"
11	Varies	1100762	Galvanized Bow - High Rise 96" To 102"
12	Varies	1100695	Steel Bow Shank - Low Rise
12	Varies	1106925	Steel Bow Shank - High Rise
12	Varies	1122822	9" Adjustable Bow Shank
13	Varies	1120836	Steel Single Bow Bracket
14	Varies	1700049	Fixed Tube - 1-1/8" X 19 Ft
15	Varies	1100834-EXT	Aluminum Extruded Tarp Stop Upright
15	Varies	1100834-CAST	Aluminum Cast Tarp Stop Upright
15	Varies	1105168	Aluminum Cast 6" Offset Tarp Stop Upright
16	Varies	1100833	Tarp Stop Body
17	Varies	1703604	Clevis Pin - 5/16" X 2-7/8" For Tarp Stop
18	Varies	1704380	Bowtie Cotter Pin For Tarp Stop
19	Varies	15946	Aluminum Extruded Tarp Stop Kit With Mounting Hardware
19	Varies	1124780	Aluminum Cast Tarp Stop Kit With Mounting Hardware
19	Varies	1124783	Aluminum Cast 6" Offset Tarp Stop Kit With Mounting Hardware
20	2	16361	3-Piece Universal Aluminum End Cap (Front Or Rear) - 90" To 104"
**	1	1100171	Standard Crank Arm; 24"
**	1	1101931	Flex Crank Arm With 40" Extension
**	1	1107918	Flex Crank Arm With 54" Extension
**	1	1107918-C	Flex Crank Arm With Custom Length Extension; Per Foot
**	Varies	1107076	Roll Tube Swaged Connector
**	1	1114359	Front Stretch Cord Roll Return Kit
**	1	1100138	Roll Tube End Plug
**	Varies	1123541	102" Flex Bow Kit With Steel Brackets
**	Varies	1123542	102" Flex Bow Kit With Aluminum Brackets
**	Varies	1123544	97" Flex Bow Kit With Steel Brackets
**	Varies	1123545	97" Flex Bow Kit With Aluminum Brackets
**	1	1101685	Ridge Strap Kit With Anchor - 1" X 25 Ft
**	1	1101686	Ridge Strap Kit With Anchor - 1" X 39 Ft
**	1	1101687	Ridge Strap Kit With Anchor - 1" X 46 Ft
**	1	1107068	Ridge Strap Kit With Anchor - 1" X 56 Ft
**	1	1100783	Ridge Strap Kit With Anchor - 2" X 25 Ft
**	1	1100784	Ridge Strap Kit With Anchor - 2" X 39 Ft
**	1	1100774	Ridge Strap Kit With Anchor - 2" X 46 Ft
**	1	1107069	Ridge Strap Kit With Anchor - 2" X 56 Ft
**	Varies	1700650	Rubber Strap With Hooks - 21 In
**	Varies	1700682	Box Hook

**Item not shown. *Oversized items, over length shipping rates apply.

BELT & RATCHET TARP SYSTEM

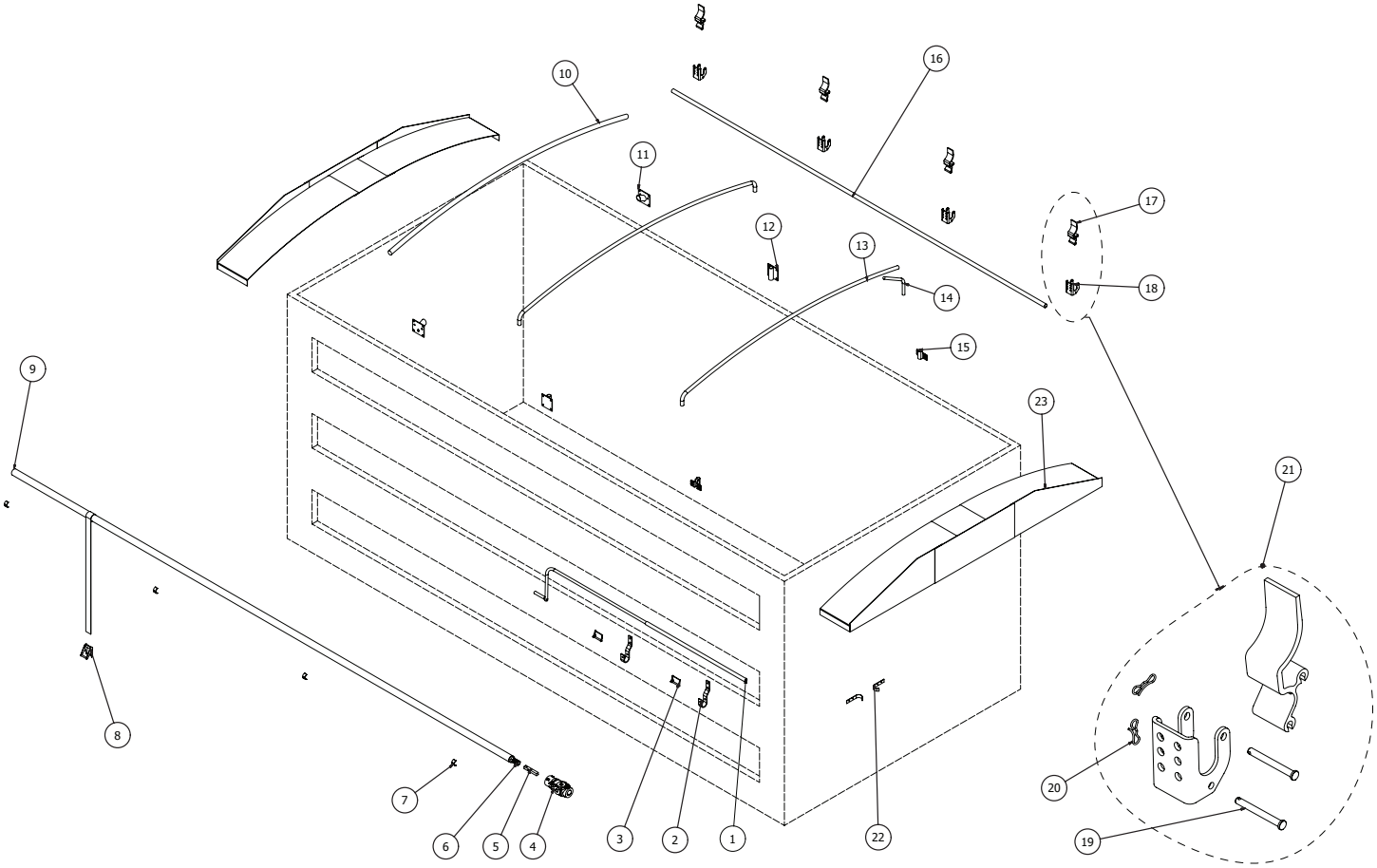

BASE SYSTEM	PART #	TARP OPTIONS* -22BV 22 OZ BLACK VINYL	TARP STOP OPTIONS* -ACS ALUMINUM CAST -AC6 ALUMINUM CAST 6" OFFSET	END CAP OPTIONS* -FEC FABRIC END CAPS FRONT & BACK -AEC ALUMINUM END CAPS FRONT & BACK
*LEAVE BLANK FOR STANDARD TARP, TARP STOP AND END CAPS				
11' – 15'	PBR15	-22BV	-ACS or -AC6	-FEC or -AEC
16' – 20'	PBR20	-22BV	-ACS or -AC6	-FEC or -AEC
21' – 25'	PBR25	-22BV	-ACS or -AC6	-FEC or -AEC
26' – 30'	PBR30	-22BV	-ACS or -AC6	-FEC or -AEC
31' – 35'	PBR35	-22BV	-ACS or -AC6	-FEC or -AEC
36' – 40'	PBR40	-22BV	-ACS or -AC6	-FEC or -AEC
41' – 45'	PBR45	-22BV	-ACS or -AC6	-FEC or -AEC
46' – 50'	PBR50	-22BV	-ACS or -AC6	-FEC or -AEC
51' – 54'	PBR54	-22BV	-ACS or -AC6	-FEC or -AEC

BELT & RATCHET TARP SYSTEM

REF.	QTY	PART #	DESCRIPTION
PREMIUM BELT & RATCHET TARP REPLACEMENT PARTS			
1	1	1100461	Offset Crank Arm
2	2	1101930	Offset J-Hook Crank Retainer
2	2	1100386	Crank Retainer Kit With 7" Stand Off
3	2	1700526	Wire Lock Pin - 3/8" X 2-1/2"
4	1	1700527	1" U-Joint
5	1	1115774	1" Square Connector Key
6	1	1105033	Roll Tube Square Key Weldment
7	Varies	1701354	Plastic U-Clamp
8	Varies	1107225	Strap Hold Down Kit With Hook
8	Varies	1106772	Strap Hold Down Kit With Hook; 9 Ft Length
9	Varies	1700046	Roll Tube - 2" X 21 Ft With Swage
10	Varies	1705128	Flex Bow; 1-3/8" Dia. - 97"
10	Varies	1705129	Flex Bow; 1-3/8" Dia. - 102"
11	Varies	1122932	Steel Flex Bow Bracket
11	Varies	1705324	Aluminum Flex Bow Bracket
12	Varies	1109110	Aluminum Bow Bracket
13	Varies	1100760	Galvanized Bow - Low Rise; 93" To 102"
13	Varies	1117905	Galvanized Bow - High Rise; 89" To 95"
13	Varies	1100762	Galvanized Bow - High Rise; 96" To 102"
14	Varies	1100695	Steel Bow Shank - Low Rise
14	Varies	1106925	Steel Bow Shank - High Rise
14	Varies	1122822	9" Adjustable Bow Shank
15	Varies	1120836	Single Bow Bracket
16	Varies	1700049	Fixed Tube - 1-1/8" X 19 Ft
17	Varies	1100834-Ext	Aluminum Extruded Tarp Stop Upright
17	Varies	1100834-Cast	Aluminum Cast Tarp Stop Upright
17	Varies	1105168	Aluminum Cast 6" Offset Tarp Stop Upright
18	Varies	1100833	Tarp Stop Body
19	Varies	1703604	Clevis Pin - 5/16" X 2-7/8"
20	Varies	1704380	Bowtie Cotter Pin
21	Varies	15946	Aluminum Extruded Tarp Stop Kit With Mounting Hardware
21	Varies	1124780	Aluminum Cast Tarp Stop Kit With Mounting Hardware
21	Varies	1124783	Aluminum Cast 6" Offset Tarp Stop Kit With Mounting Hardware
22	4	12282	J-Hooks
23	2	16361	3-Piece Universal Aluminum End Cap (Front Or Rear) - 90" To 104"
**	Varies	1107076	Roll Tube Swaged Connector
**	Varies	1123541	102" Flex Bow Kit With Steel Brackets
**	Varies	1123542	102" Flex Bow Kit With Aluminum Brackets
**	Varies	1123544	97" Flex Bow Kit With Steel Brackets
**	Varies	1123545	97" Flex Bow Kit With Aluminum Brackets
**	1	1101685	Ridge Strap Kit With Anchor - 1" X 25 Ft
**	1	1101686	Ridge Strap Kit With Anchor - 1" X 39 Ft
**	1	1101687	Ridge Strap Kit With Anchor - 1" X 46 Ft
**	1	1107068	Ridge Strap Kit With Anchor - 1" X 56 Ft
**	1	1100783	Ridge Strap Kit With Anchor - 2" X 25 Ft
**	1	1100784	Ridge Strap Kit With Anchor - 2" X 39 Ft
**	1	1100774	Ridge Strap Kit With Anchor - 2" X 46 Ft
**	1	1107069	Ridge Strap Kit With Anchor - 2" X 56 Ft
**	Varies	1700650	Rubber Strap With Hooks - 21 In
**	Varies	1700682	Box Hook

**Item not shown. *Oversized items, over length shipping rates apply.

SIDE DUMP TARP SYSTEM

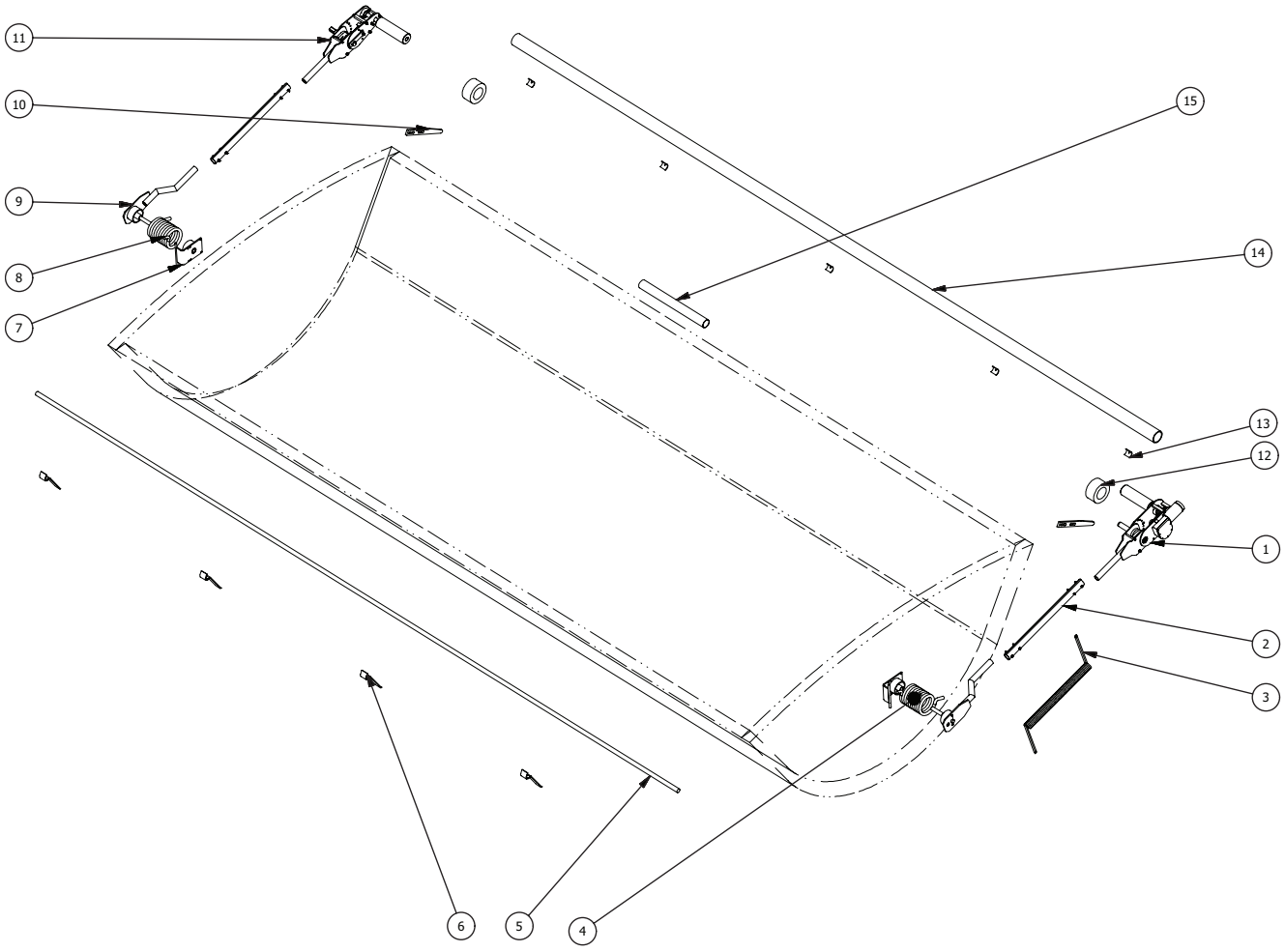

Dual Conductor Plug Kits

Vertical Part #11264
Horizontal Part #14566

Coiled Wire 15'

Part #14993

Complete Coiled Wiring Kit

Vertical Part #14993-VKIT
Horizontal Part #14993-HKIT

Idler Head Assembly

Part #15116

Lower Pivoting Arm

Part #15094

SIDE DUMP TARP SYSTEM

REF.	QTY	PART #	DESCRIPTION
SIDE DUMP SYSTEM REPLACEMENT PARTS			
1	1	15092	Powerhead Assembly
2	2	15093	Bulletproof Arm, 29-3/4"
3	1	14993	15' Coiled 6GA Wire
4	1	14775	3/4" Coil Spring, Front
5	1 - 2	1700049	Stationary Pipe, 20'
6	5	16401	Clamp Kit for Stationary Tube
7	2	15095	Pivot Pin
8	1	14776	3/4" Coil Spring, Rear
9	2	15094	Lower Pivot Arm
10	2	15098	Roller Guide Bar
11	1	15116	Idlerhead Assembly
12	2	14777	Roller Tube Rubber Donut
13	7	15099	Nylon U-Clamp
14	1 - 3	15090	Aluminum Roll Pipe, 20'
15	1	15090-SD	Aluminum Connection Sleeve
**	1	12250-ROCKER	EZ Switch Kit
**	2	16403	Tarp Caddie
**	1	16400	Universal Mounting Bracket Kit
**	7	16402	Weldable Stud Plates
**	1	15799	Hardware Kit

ELECTRIC SIDE DUMP KIT AND SYSTEM WITH TARP

Length	Black Vinyl Parts #	Black Mesh Part #
20'	SD20BV	SD20BM
22'	SD22BV	SD22BM
24'	SD24BV	SD24BM
26'	SD26BV	SD26BM
28'	SD28BV	SD28BM
30'	SD30BV	SD30BM
32'	SD32BV	SD32BM
34'	SD34BV	SD34BM
36'	SD36BV	SD36BM
38'	SD38BV	SD38BM
40'	SD40BV	SD40BM

SIDE DUMP TARPS COME STANDARD AT 154" WIDE

Length	Black Vinyl Parts #	Black Mesh Part #
20'	154-20-SD-BV	154-20-SD-BM
22'	154-22-SD-BV	154-22-SD-BM
24'	154-24-SD-BV	154-24-SD-BM
26'	154-26-SD-BV	154-26-SD-BM
28'	154-28-SD-BV	154-28-SD-BM
30'	154-30-SD-BV	154-30-SD-BM
32'	154-32-SD-BV	154-32-SD-BM
34'	154-34-SD-BV	154-34-SD-BM
36'	154-36-SD-BV	154-36-SD-BM
38'	154-38-SD-BV	154-38-SD-BM
40'	154-40-SD-BV	154-40-SD-BM

**Item not shown. *Oversized items, over length shipping rates apply.

TRADITIONAL HEAVY DUTY TARPS

Mesh Tarps

BLACK MESH & MULTI-COLOR MESH

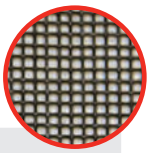

The industry standard cargo control mesh. Medium weight, PVC-coated polyester recommended for rock, sand, gravel, and brush.

MATERIAL CODE	COLORS AVAILABLE
-BM	Black
-MC	Multi-Color

MONSTER MESH

Heavyweight tightly woven mesh with 50% more threads than our HD. PVC-coated polyester. Perfect for refuse and storm clean-up applications.

MATERIAL CODE	COLORS AVAILABLE
-MM	Multi-Color

WOVEN MESH

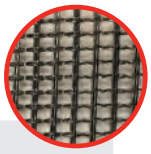

Medium weight, open PVC-coated polyester mesh that provides high-air flow to reduce wind whip. Preferred for coarse commodities at highway speeds.

MATERIAL CODE	COLORS AVAILABLE
-WM	Black

ARMOR MESH

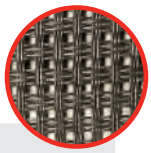

Severe duty block woven 5x5 PVC-coated polyester mesh. Provides outstanding performance in recycling, refuse, demo, and storm clean-up applications.

MATERIAL CODE	COLORS AVAILABLE
-AM	Black

Vinyl & Canvas Tarps

ASPHALT LUMITE

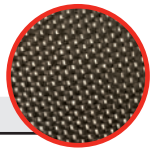

Lightweight and water-resistant polypropylene fabric. Rated up to 350ºF, excellent for asphalt hauling applications.

MATERIAL CODE	COLORS AVAILABLE
-LU	Black

18 OZ BLACK VINYL

The industry standard tarp fabric preferred for asphalt hauling and agricultural applications. PVC-coated polyester.

MATERIAL CODE	COLORS AVAILABLE
-BV	Black

22 OZ BLACK VINYL

Severe duty, heavier weight and more durable version of our 18 oz vinyl for extended tarp life. PVC-coated polyester.

MATERIAL CODE	COLORS AVAILABLE
-22BV	Black

RFL COATED CANVAS

Severe duty asphalt tarp. Tightly woven, coated polyester canvas. Rated to 400ºF and stays flexible in cold weather.

MATERIAL CODE
-RFL

Tarp Part Numbering System

Example **84 - 18 - MM - 2F - P**

Tarp Width (in) | Tarp Length (ft) | Material | Flaps | Tarp Style

72"	10'	26'	BM – Black Mesh / MC – Multi-Color Mesh	Blank – No Flaps	S – Spline in Tarp Front
78"	12'	28'	WM – Woven Black Mesh	2F – 2 Flaps	P – Pull Style
84"	14'	30'	MM – Monster Mesh	3F – 3 Flaps	N – No Pocket
90"	16'	32'	AM – Armor Mesh		T – Throw Tarp
96"	18'	34'	RFL – RFL Coated Canvas		C – Custom
	20'	36'	LU – Asphalt Lumite		COMBO – Spline & Grommets
	22'	38'	BV – 18 oz Black Vinyl		STP – Grommets Down Side
	24'		22BV – 22 oz Black Vinyl		

MEASURING LENGTH & WIDTH

For Front-to-Back Flip Tarps, the general rule is to add 2 feet to the length being covered and subtract 4 inches from the distance between the mounting plates.

Mesh and Vinyl Tarps

STANDARD BLACK MESH

The industry standard cargo control mesh. Medium weight, PVC-coated polyester recommended for rock, sand, gravel, and brush.

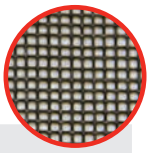

MATERIAL CODE	COLORS AVAILABLE
-BM	Black

MULTI-COLOR MESH

The same material as our Black Mesh but in a variety of colors. PVC-coated polyester

MATERIAL CODE	COLORS AVAILABLE
-MC	Multi-color

PROTEC MESH

Lightweight polypropylene mesh. Perfect for medium-duty construction and landscaping

MATERIAL CODE	COLORS AVAILABLE
-PTM	Black

18 OZ BLACK VINYL

The industry standard tarp fabric preferred for asphalt hauling and agricultural applications. PVC-coated polyester.

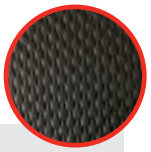

MATERIAL CODE	COLORS AVAILABLE
-BV	Black

Tarp Part Numbering System

Example ST - 84 - 18 - MC - P

Tarp Width (in) | Tarp Length (ft) | Material | Tarp Style

72"	10'	26'	BM – Standard Black Mesh	S – Spline in Tarp Front
78"	12'	28'	PTM – ProTec Mesh	P – Pull Style
84"	14'	30'	MC – Multi Color Mesh	C – Custom
90"	16'	32'	BV – Black Vinyl	COMBO – Spline & Grommets
96"	18'	34'		STP – Grommets Down Side
	20'	36'		
	22'	38'		
	24'			

MEASURING LENGTH & WIDTH

For Front-to-Back Flip Tarps, the general rule is to add 2 feet to the length being covered and subtract 4 inches from the distance between the mounting plates.

MASTER CROSS REFERENCE

US TARP PART #	DESCRIPTION	ROLL RITE® PART #	DONOVAN® PART #	MOUNTAIN PART #	AERO® PART #	REF. #
TARP MOTOR						
13655	Bulletproof Slim 50:1 Tarp Motor; 12V	10310, 10360	61G, 61X	K0170S	0755-623457-SQ	N/A
13732	Bulletproof 60:1 Tarp Motor; 12V	10310, 10360	1802061, 1802066, 61G	K0170S	0755-623474	N/A
13957	Bulletproof 90:1 Tarp Motor; 12V	10120	1704878, 61G	K0170TS	0755-623474	N/A
15938	Bulletproof 90:1 Tarp Motor; 12V	10120	1704878, 4422	K0170TS, K0170SW	—	N/A
11248	Powerhouse Heavy Duty 70:1 Tarp Motor; 12V	10122	4422	K0170TS, K0170SW	—	N/A
ELECTRICAL REPLACEMENT PARTS						
11156	40 Amp Circuit Breaker	—	1856	K018440	—	N/A
13720	50 Amp Circuit Breaker	—	—	K0184	0755-623504	N/A
12250	EZ Switch Kit	—	1495	K0176Q	0755-962131	N/A
13994	EZ Switch Relay	10698	1464	K0176M	0755-623560	N/A
14243	Aluminum Switch Bracket	10390	1532	—	—	N/A
13979	Rocker Switch	19300	1897	K0176SO	0755-962102	N/A
11279	8 Gauge Dual Conductor Wire	100743	2141	—	—	N/A
11147	6 Gauge Dual Conductor Wire	11330	—	K0146	0755-626535	N/A
14885	4 Gauge Dual Conductor Wire	11330	672	—	—	N/A
12415	18 ga. 3-Conductor Wire	11410	—	—	—	N/A
11264	Dual Conductor Plug Set - Vertical	12760	3848	1266	—	N/A
14566	Dual Conductor Plug Set - Horizontal	—	—	K0173	0755-626453	N/A
11479	Rotary Switch Kit	—	85N	ETC5014	0311-962531	N/A
11129	Rotary Switch	—	600	K0176	0755-623456	N/A
14995	Trailer Contact Plate	101736	4241	K0141	0755-960150	N/A
14782	Square Bow Ends for Cable Bows	—	1744		—	N/A
13810	Standard 98" width & 12" Rise Tarp Bow with Standard Sliders	—	—	Z5001K	—	4
14707	Aluminum Front Mounting Assembly, 95" length standard 2164	—	—	Z1017	1111-860538	1
14291	Aluminum Wind Deflector, 95" length standard	—	—	Z1041	1111-962211	2
14288	Steel Tarp Tension Bar, 95" length standard	—	2109	Z1010	1111-860913	3
14786S	Rear Cable Mount Asm, Steel	—	1988	Z7000K	1111-960311 (960312)	8
14786A	Rear Cable Mount Asm, Aluminum	—	1989	Z7001K	1111-960311 (960312)	8
14290	Cable Clips	—	4100cc	Z1015	0850-603755 (0510 & 0564)	10
11140	Chain Crank Assembly for Cable System	—	2105	Z1014C	1111-962205	12
11285	# 40 Chain with Master Link - 12' length	—	1115	Z2007	0720-603557	N/A
14675	42-Tooth Sprocket	—	4109-7	Z1003	0750-619591 (9595)	13
14674	7-inch Front Pulley	—	2114	Z1001	1111-964011	14
14287	1" Pulley Shaft, 103" length	—	2127	Z1004	1111-860554	15
14533	1" Dia. Pillow Block Bearing	—	4112	K0520	—	16
14289	1/4" Galvanized Steel Cable, per ft.	—	4100	—	1111-603131 (32, 33, & 34)	N/A
14907	1/4" Stainless Steel Cable, per ft.	—	4100ss	Z1014	—	N/A
14242	Anti Lift Kit	—	1099	—	1111-960340 (960342)	6 & 7
TARP BOW/TENSION HOOP ASSEMBLIES						
12372	Tension Hoop Assembly	—	3976	PIOHOO1	—	N/A
7670	Aluminum Tarp Bow Set w/105-1/2" Cross Tube	76720	—	—	—	N/A
7671	Tension Bow Assembly	76710	—	—	—	N/A

MASTER CROSS REFERENCE

US TARP PART #	DESCRIPTION	ROLL RITE® PART #	DONOVAN® PART #	MOUNTAIN PART #	AERO® PART #	REF. #
TARP SPOOL REPLACEMENT PARTS						
11211	Aluminum Tarp Spool Housing, 92" width	36150	—	—	0311-961962	3
11210	Aluminum Tarp Spool Housing, 98" width	36160	—	—	0311-961965	3
11286	Aluminum Tarp Spool Housing,104" width	36170	—	—	—	3
14824	Open Top Aluminum Housing	—	3032	K0101SS	0311-961989	2
11200	2" Heavy Duty Aluminum Tarp Axle, 101-5/8"	—	2365	K0174	0311-961302	6
14939	91" Pre-Threaded Tarp Axle w/ Stub Shaft	31020	—	—	0311-961300	N/A
14940	97" Pre-Threaded Tarp Axle w/ Stub Shaft	31030	—	—	0311-961300	N/A
14941	103" Pre-Threaded Tarp Axle w/ Stub Shaft	31040	—	—	0311-961302	N/A
11139	3/4" Axle Bearing	31050	1752	K0187	—	10
11201	Spool Shaft, 5"	10160	2838	K0179A	—	9
11143	Rubber Bumper for Tarp Spool Bracket	36300	—	—	—	12
11209	Aluminum Housing Support Braces	36850	—	K0120	—	21
11380	Wind Deflector 97"	36360	—	—	—	5
11208	Wind Deflector, 103"	36350	—	—	—	5
11295	Aluminum Tarp Spool Bracket w/ bumper	36340	3270	—	—	13
11668	Ground Level Crankbox	—	441	K0340	—	17
12357	Upper 18-Tooth Sprocket & Shaft	—	2403	K0105A	—	16
11285	#40 Chain with Master Link, 12ft	—	793	K0220	—	N/A
12230	Steel Chain Guard	—	114	K0201	—	18
PIVOT REPLACEMENT PARTS						
11183	3-Spring Pivot Pin	45330	—	—	—	1
11132	4-Spring Pivot Pin	45340	—	K0256	—	1
11272	5-Spring Pivot Pin	45350	—	K0257	—	1
11121	Spiral Torsion Spring	See pg. 41	2416	K0199	—	3
11141	Stainless Steel Bushing for Pivot Pin	47010	2833	K0283	—	4
11142	External Retaining Ring for Pivot Pin	47000	2834	K0258	—	5
CAB LEVEL SPRING RETURN REPLACEMENT PARTS						
13402A	Adjustable Spring Return Roller Assembly	—	99	PT217	0321-968006 (08 & 09)	2
14988	1/2" Truck Rope Black/Orange, Per Foot	—	162	PT109	0321-961115	N/A
14581	Aluminum Rear Pullbar Assembly	—	105	PT205	0321-967009	14
12282	J-Hook	—	62	PT218	0730-612360	N/A
11661	Fold-away Crank Handle for Cab Level	—	4128	K0330L	0311-961089	6
13371	Steel 3-Hole Mounting Bracket	—	4155	LDSCEP	0311-863395	5
BULLETPROOF ARMS REPLACEMENT PARTS						
13633	Aluminum Bulletproof Arm, 168" Length *	—	1473	K0409	—	9
13722	Aluminum Bulletproof Arm, 192" Length *	—	—	K0411	—	9
13723	Aluminum Bulletproof Arm, 240" Length *	—	3335	K0414E	—	9
14521	Bulletproof Cross Tube, Steel for 96" Wide	—	—	K0420	—	10
14522	Bulletproof Cross Tube, Steel for 102" Wide	—	—	K0422	—	10
13602	Bulletproof Aluminum Cross Tube	—	1076	—	—	13
13373	Bulletproof Upper Arm Casting	—	1888	—	—	12
13632	3" Rubber Tarp Centering Flange	—	2285	K0420D	—	11

**Item not shown. *Oversized items, over length shipping rates apply.

KAPLAN TARPS

PHONE:
860-643-1384
888-611-TARP

FAX:
860-432-9791

sales@kaplantarps.com

WE'VE GOT YOU COVERED.

40 Hockanum Blvd | Vernon, CT 06066

All rights are reserved. No part of this publication may be reproduced without prior permission. Aero®, Donovan®, and Roll Rite® are registered trademarks of Aero, Donovan, and Roll Rite, respectively. Mountain Tarp™ is a trademark of Mountain Tarp.

All Manufacturers' names, numbers, symbols, and descriptions are used for reference purposes only, and it does not imply that any part listed is the product of these manufacturers.